ZOOMLION ® Truck Crane

ZLJ5551JQZ90V

QY90V633/20Y

Contents

0 Foreword 1145-000-00-20Y
1 Description of crane 1135-100-01-20Y
1.1 Model and name plate
1.2 Main components and configurations
1.3 Technical data
1.3.1 Dimensions
1.3.2 Lifting capacity
1.3.3 Weights
1.3.4 Speeds
1.3.5 Energy consumption and environmental protection
1.3.6 Lifting height chart
1.3.7 Lifting capacity table
2 Safety 1145-000-02-20Y
2.1 Traffic regulations
2.2 Break-in instructions
2.3 Planning crane operation
2.4 General safety technical guidelines
2.4.1 Requirements of the crane operator and conductor
2.4.2 Selecting an operating site
2.4.3 Supporting
2.4.4 Working conditions
2.4.5 Points for attention
2.5 Signs on the crane
2.6 Hand signals
3 Operation - crane chassis.....1135-002-03-20Y
3.1 Vehicle operating and control instruments
3.1.1 Steering wheel
3.1.2 Display unit
3.1.3 Foot pedal: Engine control
3.1.4 Foot pedal: Service brake
3.1.5 Foot pedal: Clutch
3.1.6 Keyboard
3.1.7 Center console
3.1.8 Crane lighting
3.1.9 DVD reversing system
3.1.10 Door – driver's cab
3.1.11 Seats in driver's cab
3.1.12 Toolbox
3.2 Before starting up the vehicle
3.2.1 General checks before setting off
3.2.2 Axle suspension / axle locking system
3.3 Driving the crane
3.3.1 Crane driving conditions
3.3.2 Starting and turning off the engine

3.3.3 Driving
3.3.4 Engine error codes and diagnosis
3.3.5 Important control instruments while driving
3.3.6 Off-road driving
3.3.7 Towing
3.3.8 Finishing driving operations
3.4 Outrigger – operation
3.4.1 Installing and removing the outrigger pads
3.4.2 Extending and retracting the outriggers
3.5 The crane at the jobsite
3.5.1 Converting from driving mode to crane operation
3.5.2 Outrigger pad
3.5.3 Converting from crane operation to driving mode
3.5.4 Switching the axle locking off
3.5.5 Converting to driving mode
3.5.6 Supporting the crane with support control unit
3.5.7 Checking outriggers
3.5.8 Before leaving the work site
4 Operation - crane superstructure …….…… 1135-100-04-20Y
4.1 Control instruments and indicators
4.1.1 Operator's cab
4.1.2 Operator's seat
4.1.3 Right control box
4.1.4 Left control box
4.1.5 Instrument console
4.2 Computer system
4.3 Starting up the crane
4.3.1 Checks before starting up
4.3.2 Engine error codes and diagnosis
4.3.3 Starting the engine
4.3.4 Computer system after engine start
4.4 Safety devices
4.4.1 General
4.4.2 Support control unit
4.4.3 Load moment limiter
4.4.4 Hoisting / lowering limit switch
4.4.5 Hydraulic safety valves
4.4.6 Bypass operation
4.4.7 Wind warning system
4.4.8 Emergency off switch
4.5 Crane operation
4.5.1 Preparations for crane operation
4.5.2 Derricking
4.5.3 Telescoping
4.5.4 Lifting / lowering
4.5.5 Slewing
4.5.6 Rope reeving
4.5.7 Simultaneous crane movements

4.5.8 Central lubricating system
5 Equipment …… 1135-100-05-20Y
5.1 Safety technical guidelines for assembly
5.2 Jib
5.2.1 General
5.2.2 Assembly
5.2.3 Angle settings
5.2.4 Removing
5.2.5 Electrical connections
5.2.6 Reeving in the auxiliary hoist rope
5.3 Rooster sheave
5.3.1 Assembly
5.3.2 Dismantling
5.4 Assembly of auxiliary winch
5.5 Counterweight
5.5.1 Counterweight and its assembly & disassembly mechanism
5.5.2 Assembly
6 Additional equipment……1135-002-06-20Y
6.1 Air conditioning in driver's cab
6.2 Air conditioning in operator's cab
6.3 Emergency control
6.3.1 Emergency operation – crane superstructure
6.3.2 Emergency operation – crane chassis
6.4 Interphone
7 Maintenance and service……1135-002-07-20Y
7.1 General
7.2 Cleaning and care of the crane
7.3 Maintenance intervals
7.3.1 Crane chassis maintenance and inspection plan
7.3.2 Crane superstructure maintenance and inspection plan
7.4 Lubrication
7.4.1 Hydraulic oil
7.4.2 Gear oil
7.4.3 Lubricating grease
7.4.4 Engine oil
7.4.5 Cooling medium
7.4.6 Lubricating points
7.5 Adjusting, cleaning and replacing parts
7.5.1 Replacing the wire rope
7.5.2 Replacing the hook
7.5.3 Checking and replacing return-line filter
7.5.4 Replacing the hydraulic oil filter for closed slewing pump
7.5.5 Cleaning and replacing the fuel filter
7.5.6 Cleaning and replacing the air filter
7.5.7 Replacing the pressure filter
7.5.8 Adjusting the wire rope of sliding beam
7.5.9 Tires / wheels
7.6 Transportation and storage

8 Crane inspections ……...…… 1145-000-08-20Y
8.1 Re-inspections
8.2 Periodic crane inspections
8.2.1 Inspection during break-in period
8.2.2 Inspecting the rims
8.2.3 Inspecting the brake systems
8.2.4 Inspecting the hoist and slewing mechanisms
8.2.5 Inspecting the hooks
8.2.6 Inspecting the wire rope pulleys
8.2.7 Inspecting the crane wire ropes
8.2.8 Inspecting the tightness of load carrying components
8.2.9 Inspecting the oil and fuel reservoirs
8.2.10 Inspecting the hydraulic system
8.2.11 Inspecting the electrical system
8.2.12 Inspecting the safety devices
9 Diagnostics ……1143-000-09-20Y
9.1 Diagnosis – crane superstructure
9.1.1 Instruments
9.2 Diagnosis – crane chassis
9.2.1 Instruments
9.2.2 Transmission, troubleshooting
9.2.3 Chassis, troubleshooting

Foreword

Thank you for purchasing ZOOMLION crane. These operating instructions are intended to put you in a position to operate the crane safely and utilize the reliable usage options that it provides.

This product can be widely used in industrial and mining establishments, building sites, harbor, oil field, storage, warehouse and so on to do lifting and hoisting work.

Before operating the crane, read these operating instructions carefully. Correctly understanding and using these instructions will make it easier to become familiar with the crane and avoid problems due to improper operation. Observing these operating instructions can increase liability in use, prolong the service life of your crane and reduce repair costs and downtime. The operating instructions must be read and used by all persons who are involved in use, operation, assembly and maintenance of the crane. If there is anything the operating instructions or the individual chapters that you do not understand, please contact us before starting the relevant work. Additional information about the crane you received from us must also be followed and kept with the operating instructions.

Always keep these operating instructions handy in the driver's or operator's cab. The operating instructions belong with the crane.

- **Safety Information**

The accidents occurring during the crane operation are mostly caused by ignoring the precautionary measures and safety regulations. Incorrect operation, service and maintenance are all dangerous and might cause life-threatening hazards. Therefore, do read, understand and master the precautionary measures and notes before starting your work. Operations, checks and maintenance must be carried out carefully. Special attention must be paid to the safety equipment built into the crane. The functionality of the safety equipment must be monitored at all times. The crane must not be operated if the safety equipment is not working or not working correctly. The operator’s motto must always be **Safety first!**

The contents concerning about safety are marked with "⚠" and the safety information involved in these operating instructions is only the routine one.

The following terms that are used in these operating instructions "Danger", "Warning", and "Caution" are intended to point out certain important rules of conduct to all persons who work with the crane. The meanings of the terms are as follows:

Danger:

The term "Danger" is used to provide a warning about life-threatening hazards or serious damage to property.

Warning:

The term "Warning" is used to provide a warning about potentially serious personal injury or damage to property.

Caution:

The term "Caution" is used to provide a warning about potential minor personal injury or machinery failures.

Note:

The term "Note" is used to draw attention to certain matters.

It's difficult to forecast every dangerous condition. However, operating the crane according to these operating instructions can ensure your safety. Our company assumes no liability for any accidents caused by crane operations which differ from the directions contained in these operating instructions and warning labels.

Our product and technical documents are subject to technical improvements and changes without notice. Therefore, please acquaint yourself with our updated technology information. If there are differences between illustration and product, refer to the product.

These operating instructions have been translated to be best of one’s knowledge. Zoomlion assumes no liability for translation errors. The Chinese version of the operating instructions is solely applicable for factual accuracy. If you find any errors or if any misunderstandings arise when reading these operating instructions, please contact Zoomlion immediately.

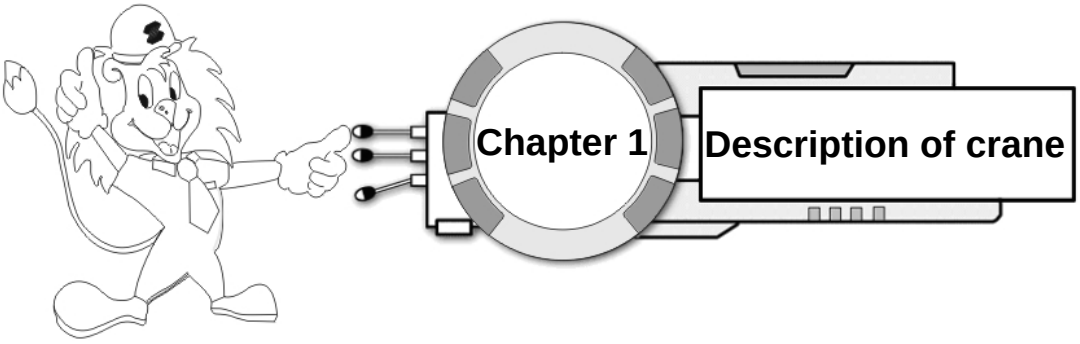

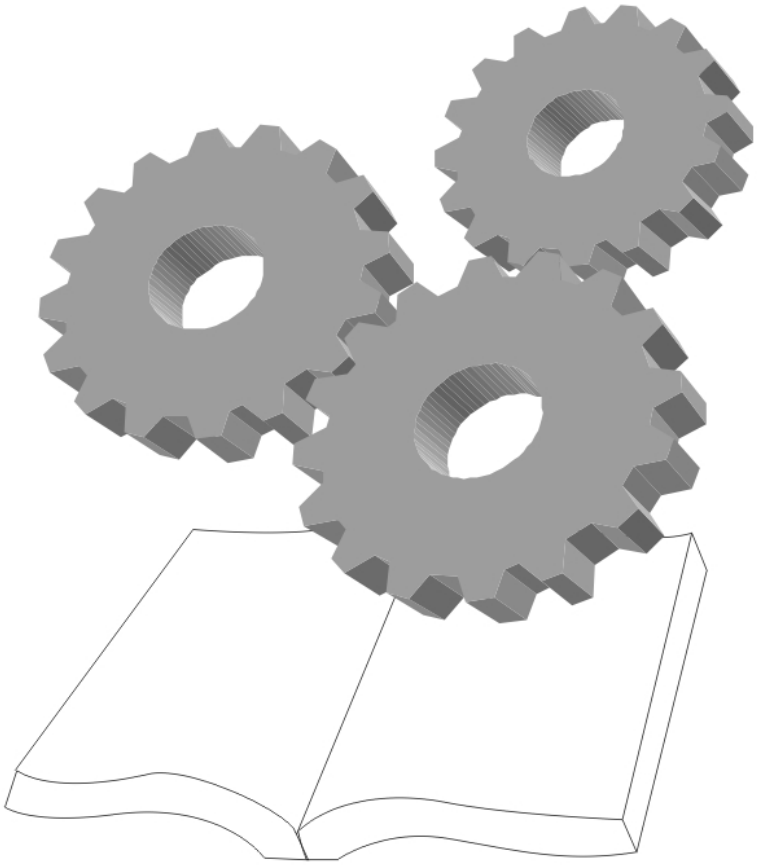

ZOOMLION

1.1 Model and name plate

1.1.1 Model

- Model in auto industry: ZLJ5551JQZ90V
- Model in engineering industry: QY90V

1.1.2 Name plate

1.1.2.1 Installation location

The name plate is installed on the left side of operator's cab.

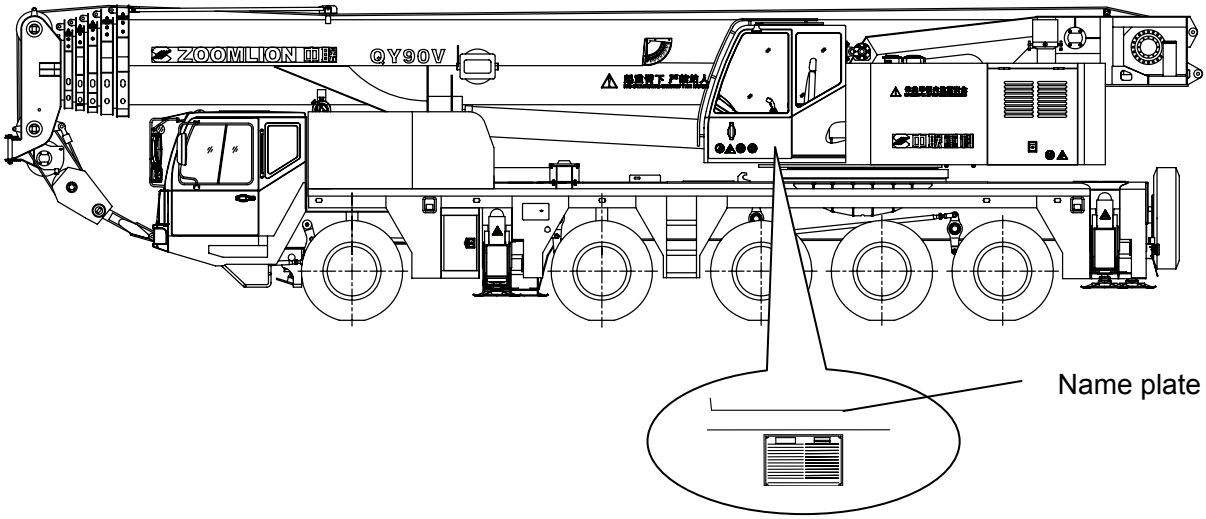

1.1.2.2 Name plate

ZOOMLION 中联

汽 车 起 重 机
TRUCK CRANE

品牌及型号	Trade Mark & Model	中联牌	ZLJ5551JQZ90V
产品特征号	Product Characteristic Code		QY90V633
最大额定总起重量	Max. Lifting Capacity		90000 kg
发动机型号	Engine Model		WP12.430N
发动机额定功率	Engine Rated Power		316 kW
最大设计总质量	Max. Design Total Mass		54600 kg
整车整备质量	Complete Vehicle Kerb Mass		54405 kg
外形尺寸(长×宽×高)	Overall Dimensions		14690mm× 2800mm× 3800mm
车辆识别代号	VIN		L5E6H5D4XXAXXXXXX
出厂编号	Production No.		XXXX
生产日期	Production Date		20XX 年(Y.) XX 月(M.)
制造国	Production Country	中国	China

长 沙 中 联 重 工 科 技 发 展 股 份 有 限 公 司 制 造

MANUFACTURER:CHANGSHA ZOOMLION HEAVY INDUSTRY SCIENCE & TECHNOLOGY DEVELOPMENT CO.,LTD.

Note:

The above details must always be provided when requiring us to offer service work.

1.1.3 Vehicle identification number (VIN) and its location

The VIN of ZLJ5551JQZ90V is L5E6H5D4×××××××××× and is stamped in the name plate and on the right side longitudinal beam of the vehicle. Exact location is shown in the following illustration:

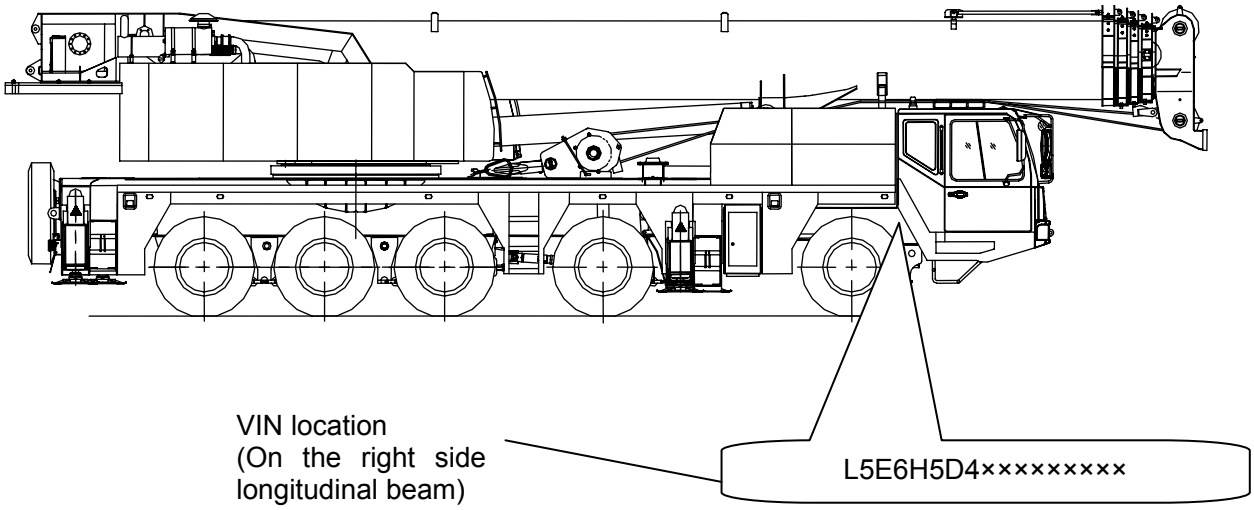

1.1.4 Engine model and its manufacturer

Engine model: WP12.430N (Chassis engine)

Manufacturer: Weichai Power Co., Ltd.

The engine name plate can be found on the left upper part of the engine. The exact location is shown in the following illustration:

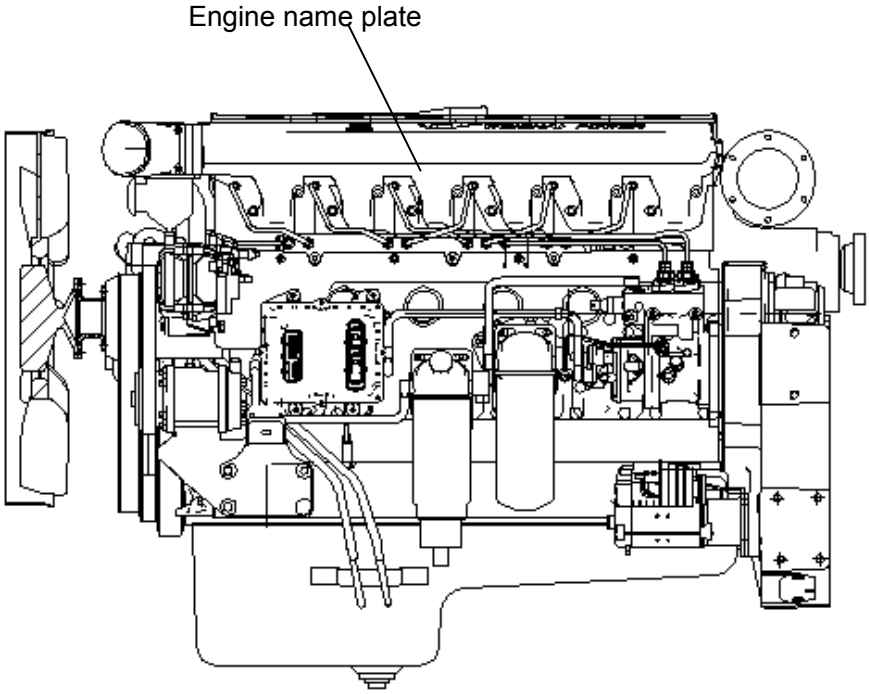

1.2 Main components and configurations

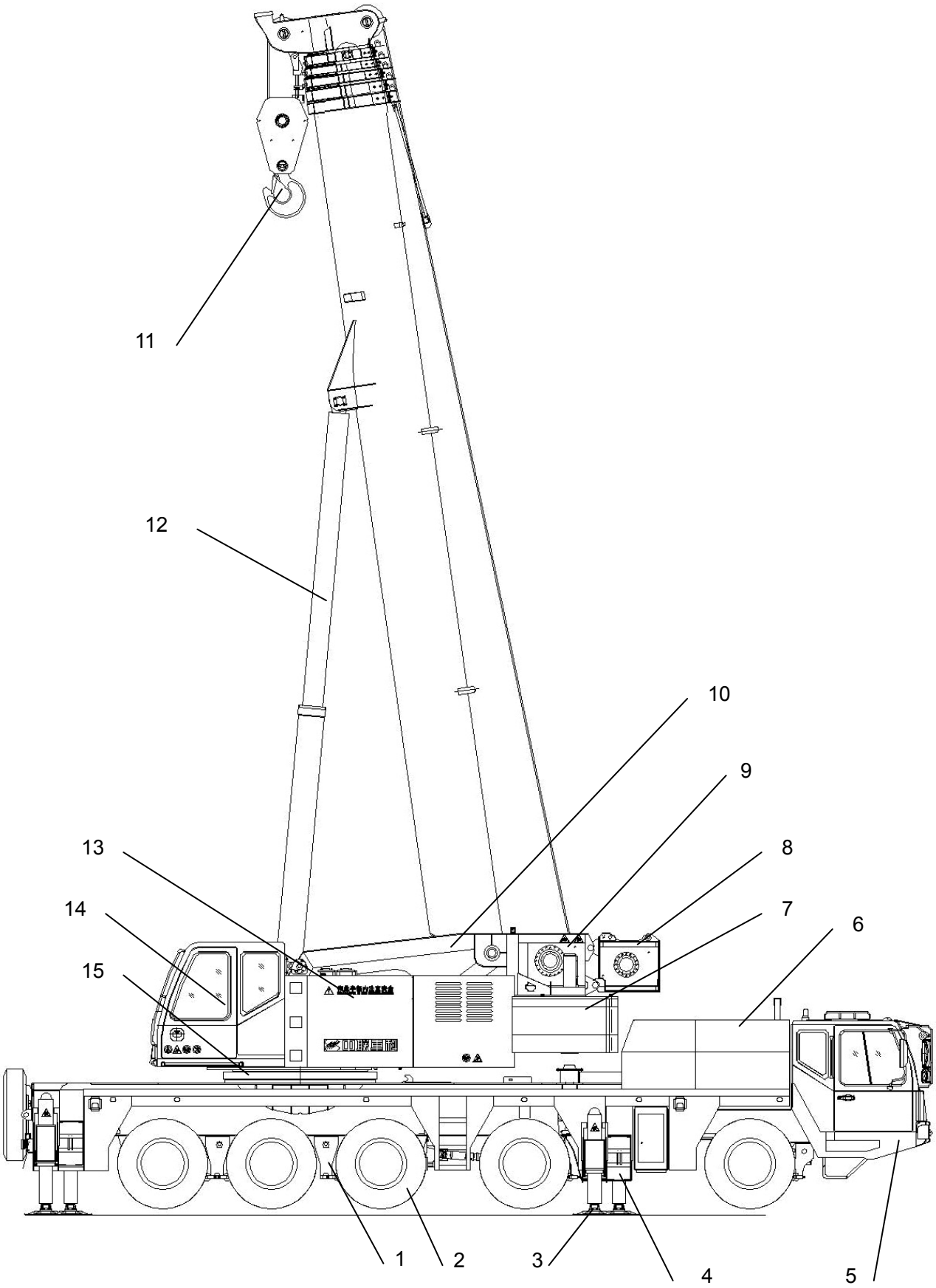

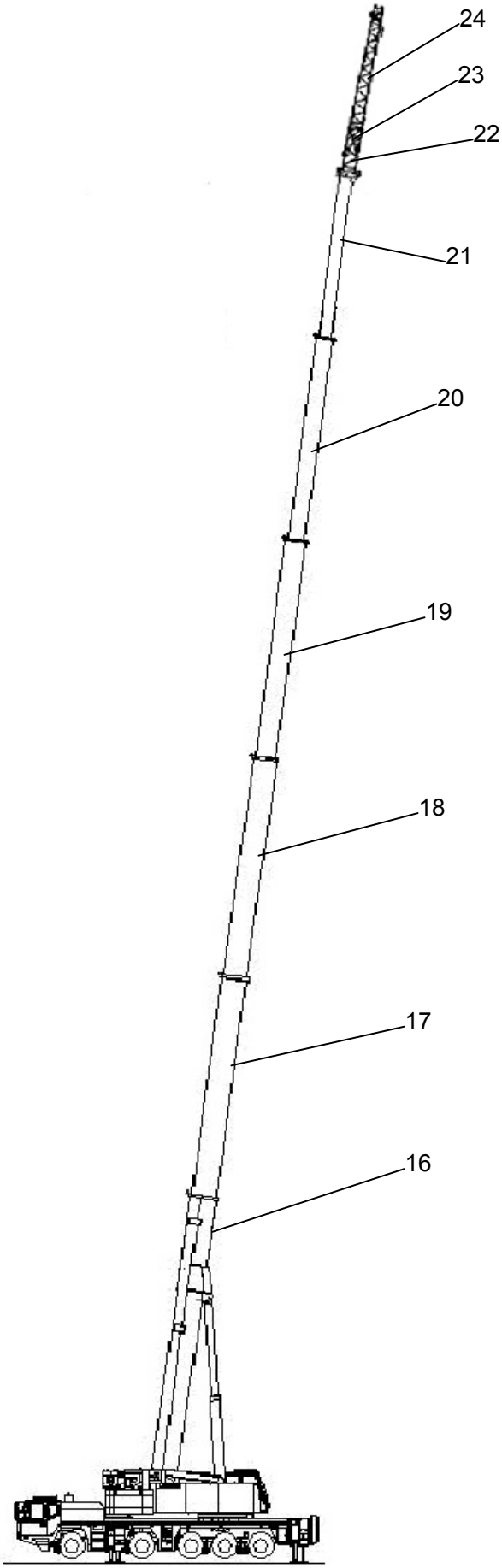
24
23
22
21
20
19
18
17
16

1.2.1 Main components

The numbers stand for the following components of the crane.

1.2.1.1 Crane chassis

1 Chassis
2 Tires – axles 1, 2, and 5 are equipped with single tire; axles 3 and 4 are equipped with double tires
3 Outrigger pad
4 Sliding beam – two sections extendable simultaneously
5 Driver's cab
6 Engine

1.2.1.2 Crane superstructure

7 Counterweight
8 Auxiliary hoist mechanism
9 Main hoist mechanism
10 Slewing table
11 Hook block
12 Derricking mechanism
13 Engine
14 Operator's cab
15 Slewing mechanism
16 Basic boom
17 Telescopic boom section I
18 Telescopic boom section II
19 Telescopic boom section III
20 Telescopic boom section IV
21 Telescopic boom section V
22 Adaptor I
23 Adaptor II
24 Jib

1.2.2 Product description

1.2.2.1 Crane chassis

a) Frame

Distortion-resistant box structure welded from high-strength steel.

b) Engine

In-line 6-cylinder diesel, manufactured by Weichai Power Co., Ltd., model WP12 Series, supercharging, intercooled.

Performance: 316 KW (430 Ps) at 1900 rpm

Maximum torque: 2060 Nm at 1000 –1400 rpm

Fuel tank: 400 L

c) Sliding beams

2-section sliding beams, fully and intermediately extendable simultaneously.

d) Transmission

EATON 12-speed RTX-16710B mechanical transmission system with manual switching system

e) Transfer case:

1-stage transfer case with longitudinal differential and differential lock

f) Axles

Axles 1, 2, and 5 are steered.

Axles 2, 4 and 5 are driven.

Axles 1 and 5 are with transversal differential and differential lock.

Axle 4 is with longitudinal / transversal differential and differential lock.

g) Suspension

Axles 1 and 2 are with hydro-pneumatic suspension which can make axles hydraulically lockable and height adjustable. Axles 3, 4 and 5 are with leaf spring suspension.

h) Tires

Radial tires

The steered wheels are single tires and the non-steered wheels are double tires.

Tire size: 12.00R24

i) Steering system

Hydraulic steering gear, dual circuit system

j) Brakes

It consists of service brake, parking brake (emergency brake) and auxiliary brake.

Service brake: acting on all wheels.

Parking brake: acting on axles 3, 4 and 5.

Auxiliary brake: engine exhaust brake.

k) Driver's cab

New-generation V-series full-width spacious cab made of thin metal plate, with safety glass, operating and control instruments and luxury equipment.

l) Electrical system

24 Volt DC, 2 batteries, each with 195 Ah

Lighting system complies with national standards.

1.2.2.2 Crane superstructure

a) Main boom

It consists of 1 basic boom and 5 telescopic sections. The boom sections are telescoped in / out via 2 telescopic cylinders and 2 sets of wire rope used together.

Main boom length: 12.5 – 56 m

b) Slewing table

High-tailed, distortion-resistant box structure, providing unlimited horizontal rotation for superstructure components.

c) Engine

In-line 6-cylinder diesel, manufactured by Weichai Power Co., Ltd., model WP6 Series, supercharging, intercooled.

Performance: 176 KW (240 Ps) at 2300 rpm

Maximum torque: 900 Nm at 1400 –1600 rpm

Fuel tank: 220 L

d) Crane drive

Diesel hydraulic with 2 axial plunger pumps and 1 gear pump is with servo control and power control.

Hydraulic pump in a compact design is flanged directly onto the diesel engine.

e) Controls

Modern CAN bus technology, computer integrated controls, engine load-limit controls, computer diagnosis, electron pedal, optional GPS.

Variable hydraulic system for open and closed loop with electro-hydraulic proportional controls.

Two 4-way joysticks, automatic self-centering, can realize infinitely variable control of all crane movements.

f) Operator's cab

All superstructure switches and display unit are arranged in it, equipped with safety glass.

Cab can be tilted backwards for 20°.

g) Safety system

Load moment limiter overload protection system, safety valves for the prevention of pipe and hose ruptures, hoisting limit switch / lowering limit switch.

h) Hoist mechanism

It consists of two hoist mechanisms: main / auxiliary hoist mechanism.

Hoist mechanism is equipped with hydraulic motor, planetary reducer and brake.

Main hoist mechanism is driven by variable motor and auxiliary hoist mechanism is driven by constant motor.

Wire rope diameter: φ19 mm

i) Derricking mechanism

1 telescopic cylinder with balance valve lifts and lowers the boom from -2° to 80°.

j) Slewing mechanism

Slewing drive device, constant motor, planetary reducer and brake.

The crane is equipped with 2 slewing mechanisms.

k) Electrical system

24 Volt DC, 2 batteries, each with 185 Ah

l) Counterweight

2 moveable counterweight plates weigh 15 T in total and can be assembled and disassembled by the counterweight handler on the tail of slewing table.

Weight variants: 0 T, 7.5 T and 15T

m) Hook block

4 hooks

The maximum lifting capacity in various reevings: 90 T, 55 T, 20 T and 7 T (1 reeving)

Hook 90 T (optional) is straight shank hook with two points.

n) Central lubricating system

All the lubricating points are automatically supplied with the correct grease quantity.

1.2.2.3 Additional equipment

a) Jib

It consists of 2 reducing lattice jib sections and a 6 m extension (optional). The jib can be attached below 0° or 30° in relation to telescopic boom via adaptor I and adaptor II.

Length of jib section 1: 10.5 m

Length of jib section 1 + jib section 2: 18.5 m

Length of extension + jib section 1 + jib section 2: 24.5 m

Note:

The extension can only be fitted in 0° offset.

b) Rooster sheave

Inserted at the boom head of telescopic boom section V, 1 reeving.

This option is set up for rapid hoists over the boom head to improve the working efficiency when the loads are light.

c) Air conditioning system

The drive's cab and operator's cab are all equipped with air conditioning and heater special for vehicle.

1.2.3 Boom

Including main boom and jib sections

1.2.3.1 Main boom

Including 1 basic boom and 5 telescopic sections

Main boom length L: 12.5 – 56 m

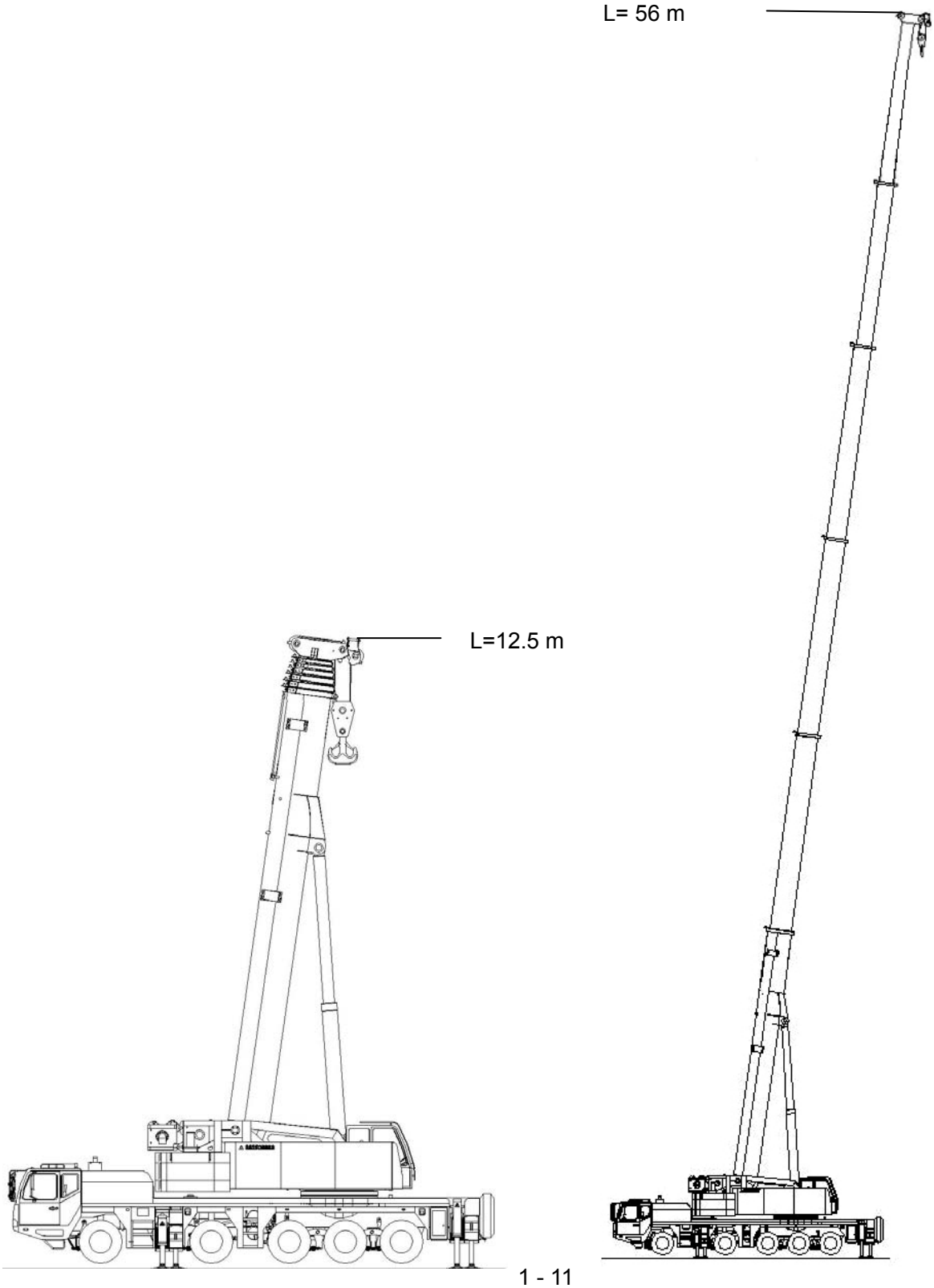

1.2.3.2 Main boom + 10.5 m jib (jib section 1)

Fully extended main boom with jib fitted (2 offsets: 0°, 30°)

Boom length L: 56 m + 10.5 m = 66.5 m

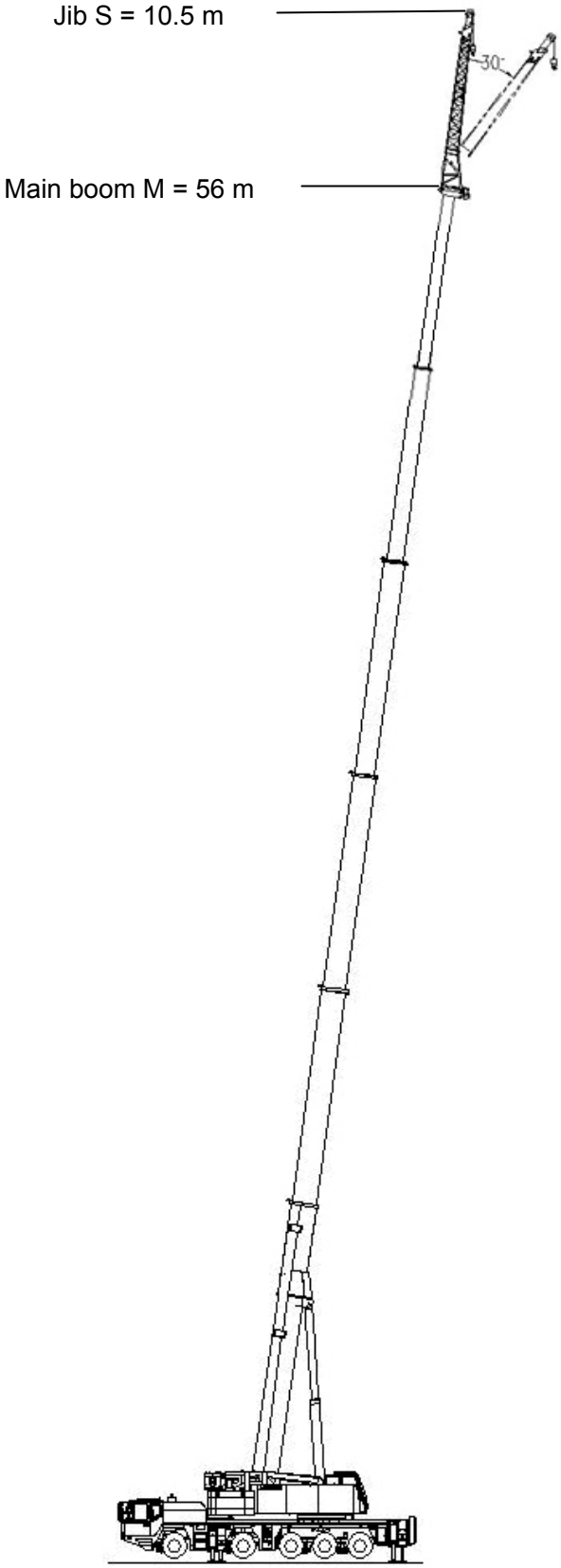

1.2.3.3 Main boom + 18.5 m jib (jib section 1 + jib section 2)

Fully extended main boom with jib fitted (2 offsets: 0°, 30°)

Boom length L: 56 m + 18.5 m = 74.5 m

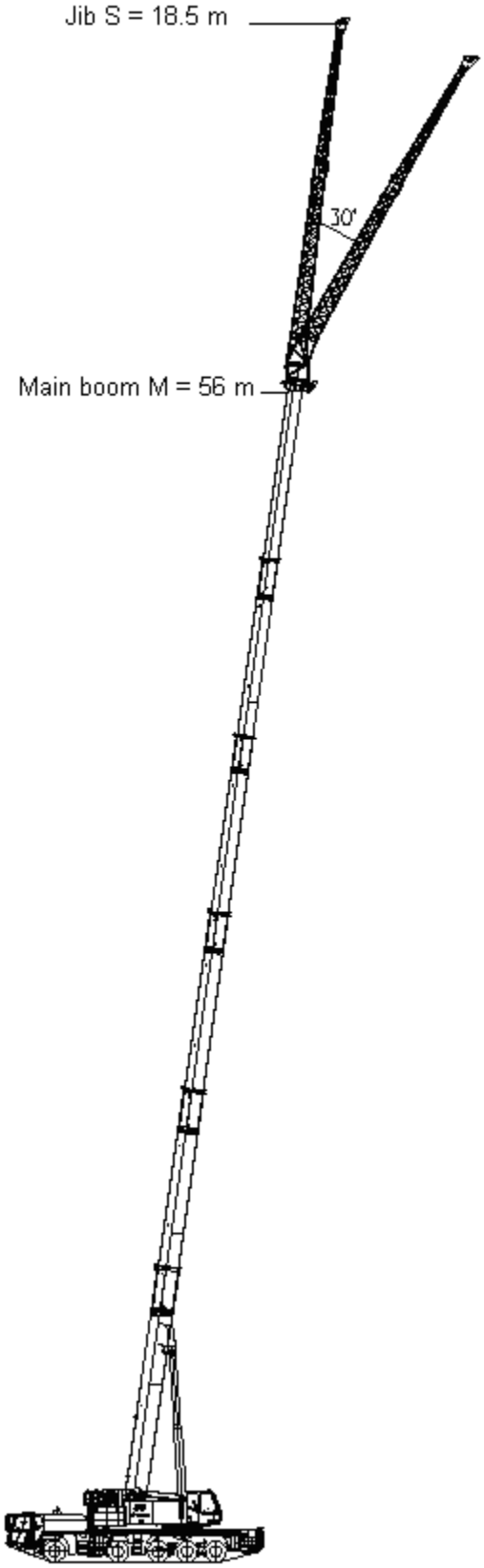

1.2.3.4 Main boom + 24.5 m jib (extension + jib section 1 + jib section 2)

Fully extended main boom with jib fitted (1 offsets: 0°)

Boom length L: 56 m + 24.5 m = 80.5 m

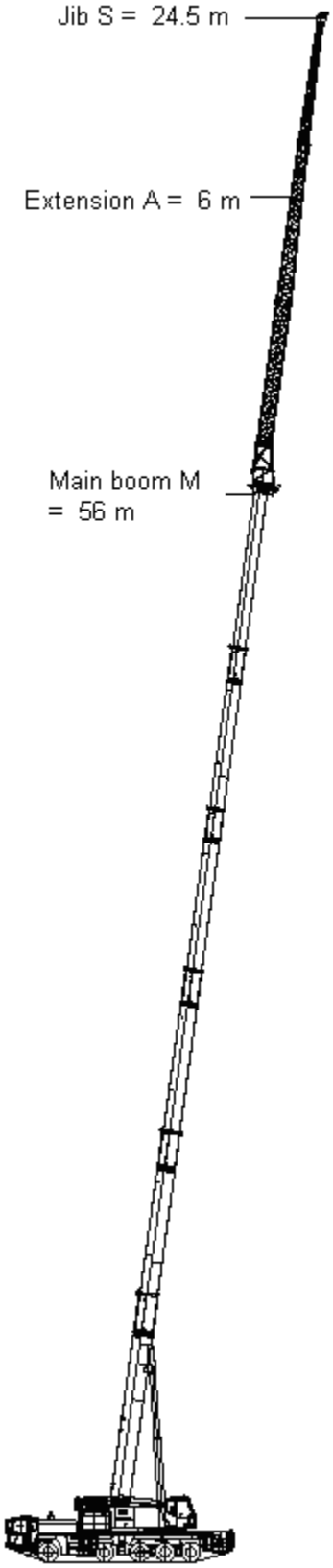

1.3 Technical data

1.3.1 Dimensions

1.3.1.1 Overall view (Unit: Metric mm)

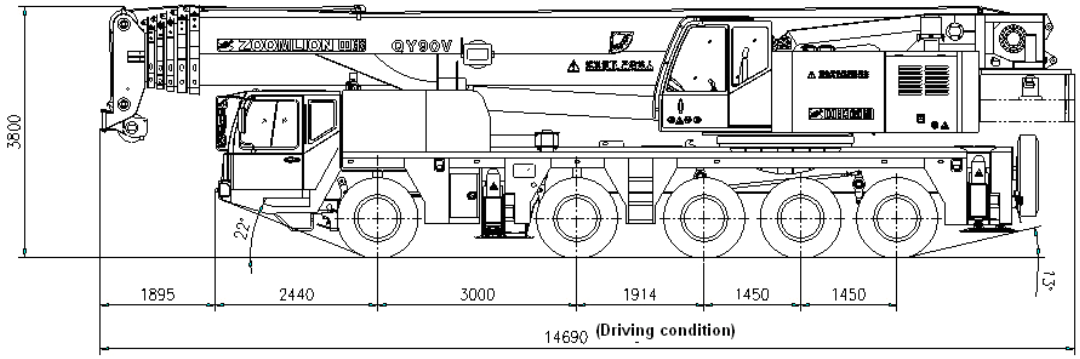

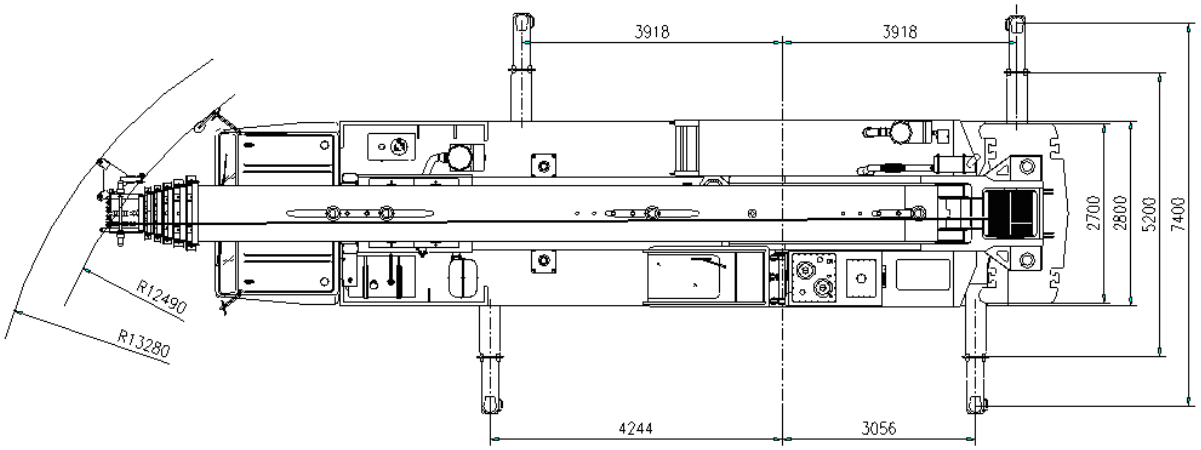

1.3.1.2 Rope diameter & length

	Rope diameter (mm)	Rope length (m)
Main hoist rope	φ19	300
Auxiliary hoist rope	φ19	190

1.3.2 Lifting capacity

Max. rated lifting capacity (kg)	Max. load moment of 12.5 m main boom (KN · m)	Max. load moment of 56 m main boom (KN · m)	Max. load moment of 24.5 m jib (KN · m)
90000	3300	1800	568

1.3.3 Weights

1.3.3.1 Axle loads

For the axle loads of crane in driving position, please refer to Chapter 3.3.4.

Axle	1	2	3	4	5	Total load
Load (kg)	9600	9600	12800	12800	9800	54600

1.3.3.2 Lifting equipment

Load (t)	Number of pulleys	Max. number of reevings	Weight (kg)
90 (optional)	7	14	830
55	4	8	540
20	1	3	290
7	0	1	200

1.3.3.3 Max. support strength per outrigger

Front outrigger (KN)	Rear outrigger (KN)
685	806

1.3.4 Speeds

1.3.4.1 Driving speeds (km/h)

Gear	1	2	3	4	5	6	7	8	9	10	RL
Speed	5.4	7.3	9.8	13.4	17.9	24.2	32.5	43.8	59.6	78	5.3
Gear	RH		Maximum gradeability								
Speed	23.6		43%								
Minimum braking distance: ≤10m (Driving speed = 30 km/h)											

1.3.4.2 Crane speeds

The mechanisms on crane superstructure can realize infinitely variable control.

Drives	Speeds	Remarks
Max. hoist rope speed (main winch)	122 m/min	Drum 4th layer
Max. hoist rope speed (auxiliary winch)	68 m/min	Drum 3rd layer
Slewing speed	0 – 1.5 r/min	
Derricking speed	Approx. 72 sec. from -2° to 80° boom position	
Telescoping speed	Approx. 800 sec. for main boom length from 12.5 m - 56 m	

1.3.5 Energy consumption and environmental protection

1.3.5.1 Engine

Engine	Limits for exhaust pollutants and smoke	Oil consumption
Chassis	GB3847-2005 GB17691-2005 Stage III	70 L/100 miles (lowest oil consumption)
Superstructure	GB3847-2005 GB17691-2005 Stage III	

1.3.5.2 Workplace-related emission value

Sound pressure level at nominal RPM	Stationary noise (db)	
	Left ear	Right ear
Driver's cab, driver's side	90	90
Driver's cab, passenger's side	90	
Operator's cab	90	90

1.3.6 Lifting height chart

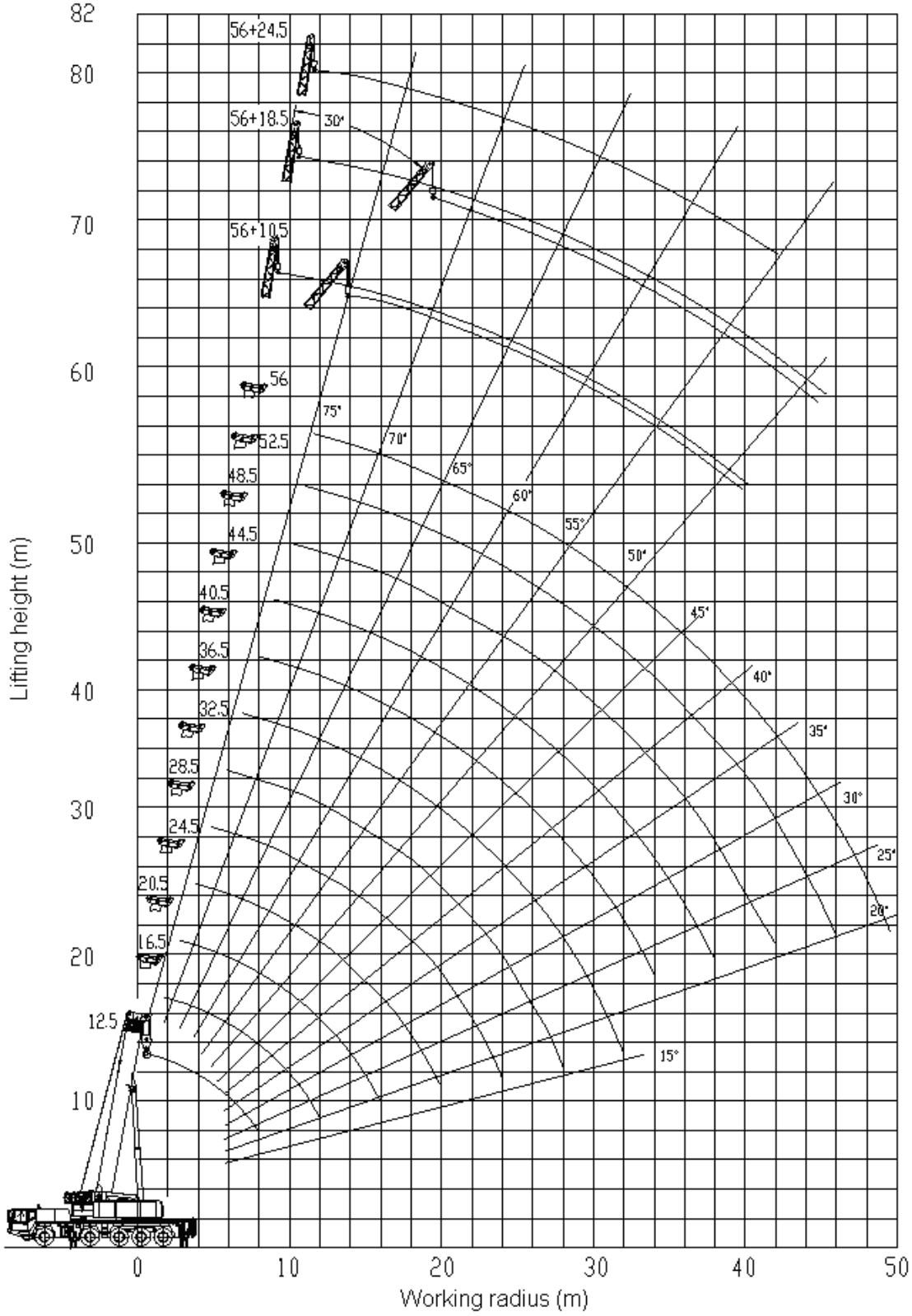

Caution:

(1) The outriggers are fully extended and all counterweight plates are assembled;

(2) The above chart does not include deflection of main boom and jib.

1.3.7 Lifting capacity table

1.3.7.1 Notes for the lifting capacity table

a) The lifting capacity table indicates the maximum load which can be lifted by this crane in different working conditions provided it is level and standing on firm and load-bearing ground. The unit of the rated lifting capacity is metric ton;

b) The values as given in the tables include the mass of the hook and slings;

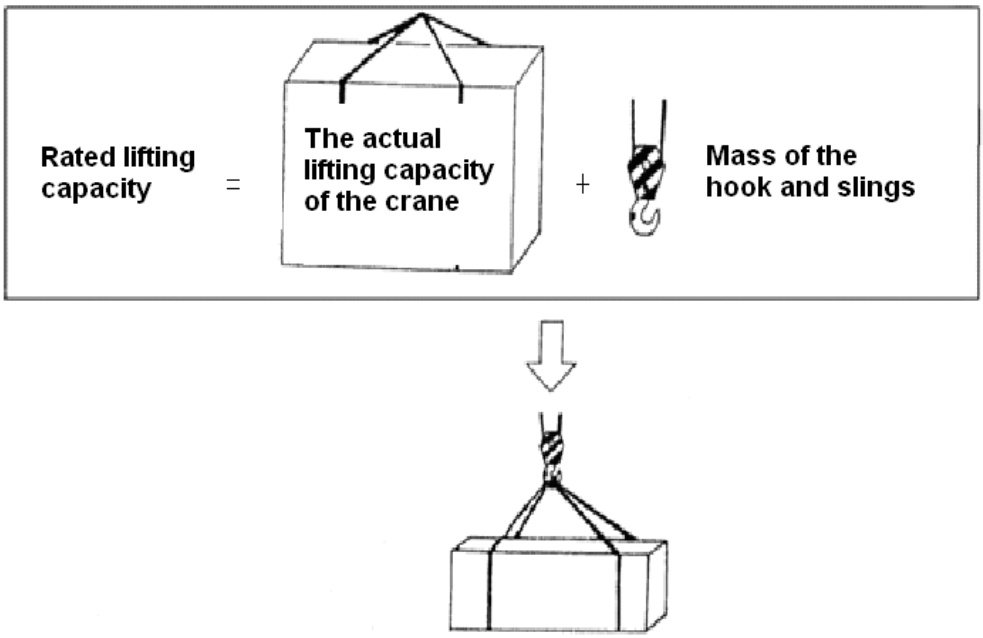

c) The values given in the lifting capacity table are suitable for full range operation;

d) The working radius in the lifting capacity table refers to the level distance from hook center to slewing center. When lifting a load, deflection of the boom is included. Its unit is metric meter;

e) The boom length must be equivalent to the length given in the lifting capacity table. The numbers I, II, III, IV and V in the table indicate the corresponding telescopic section (highest number = furthest telescopic section). The numbers 1, 2, 3 and 4 display the boom status of the telescope. 1 represents the telescope extends 0%, 2 represents the telescope extends 45%, 3 represents the telescope extends 90% and 4 represents the telescope extends 100%;

f) If the actual working radius is between any two adjacent values given in the lifting capacity table, the bigger one should be referred to;

g) The working radius of the crane must be strictly limited in the range of the lifting capacity table. If the working radius is above or below the range, the crane will topple over even without load;

h) Before operating the crane, the outriggers must be extended according to the lifting capacity table and secured;

i) Before the lifting work, all tires must be away from the ground;

j) Before lifting work, the crane must be leveled with the support control units. And checks must be done during crane operation to ensure the crane in level position;

k) The rated lifting capacities for the rooster sheave are equivalent to the rated lifting capacities for the telescopic boom to a maximum of 7 t. If the rated lifting capacity for the

main boom checked from the table is above 7 t, the load weight also cannot be more than 7 t;

l) The rated lifting capacity for the main boom is the value without jib installed. When using the main boom with jib installed, 2400 kg plus the mass of hook block and slings should be subtracted from the rated lifting capacities;

m) The telescoping percentage of boom under any working conditions should be referred to the lifting capacity table;

n) Load moment limiter is just a vital equipment to ensure safe operation of the crane. But consequences for not paying attention to the safe operation are also rest with the crane operator;

o) Never telescope the boom with load.

1.3.7.2 Rated lifting capacity table

Table 1-1 Unit: Metric ton

Working radius (m)	Main boom (m)											
	15 t counterweight, outriggers fully extended, over full range											
	12.5	16.5	20.5	24.5	28.5	32.5	36.5	40.5	44.5	48.5	52.5	56.0
3.0	90.0	80.0										
3.5	84.0	75.0	70.0									
4.0	78.0	70.0	62.0	60.0								
4.5	70.0	67.0	60.0	58.0	50.0							
5.0	64.0	60.0	56.0	54.0	50.0	39.0						
6.0	55.0	52.0	50.0	49.0	48.0	37.0	30.0					
7.0	45.0	44.0	43.0	41.0	37.5	34.0	29.5					
8.0	38.0	38.0	37.0	35.0	34.0	32.0	27.5	24.0				
9.0	33.0	32.0	33.0	33.0	31.0	30.0	25.5	22.0	20.0			
10.0		29.0	27.0	30.0	29.0	27.5	23.5	21.0	18.5	16.5		
12.0		22.0	21.5	22.2	22.0	20.5	20.0	18.5	16.5	14.5	12.0	
14.0			16.0	16.5	17.5	18.0	17.5	16.0	14.5	13.0	11.0	10.5
16.0			13.0	13.5	14.0	14.0	14.2	14.0	13.0	11.5	10.0	10.0
18.0				11.0	11.5	12.0	11.6	11.5	11.5	10.0	9.5	9.2
20.0				9.0	9.5	9.8	9.5	9.5	9.8	9.2	9.0	8.5
22.0					7.8	8.0	7.8	8.0	8.2	8.5	8.1	7.6
24.0					6.6	7.0	6.8	6.8	7.0	7.3	7.3	7.0
26.0						6.0	5.8	5.8	6.0	6.3	6.5	6.4
28.0						5.2	5.0	5.0	5.0	5.4	5.5	5.6
30.0							4.2	4.2	4.4	4.6	5.0	5.0
32.0							3.5	3.6	3.8	4.0	4.2	4.4
34.0								3.2	3.2	3.5	3.8	3.8
36.0									2.6	3.0	3.2	3.3
38.0									2.3	2.6	2.8	2.8
40.0										2.0	2.1	2.1
42.0										1.8	1.9	1.8
44.0											1.6	1.6
46.0											1.3	1.3
48.0												1.1
50.0												0.9
Reeving	14	12	10	8	7	6	4	4	3	3	2	2
I	1	1	2	2	2	2	3	3	3	3	3	4
II	1	2	2	2	2	2	2	3	3	3	3	4
III	1	1	1	2	2	2	2	2	3	3	3	4
IV	1	1	1	1	2	2	2	2	2	3	3	4
V	1	1	1	1	1	2	2	2	2	2	3	4
Hook	90 t				55 t				20 t			

Table 1-2 Unit: Metric ton

Working radius (m)	Main boom (m)											
	7.5 t counterweight, outriggers fully extended, over full range											
	12.5	16.5	20.5	24.5	28.5	32.5	36.5	40.5	44.5	48.5	52.5	56.0
3.0	90.0	80.0										
3.5	84.0	75.0	70.0									
4.0	78.0	70.0	62.0	60.0								
4.5	70.0	67.0	60.0	58.0	50.0							
5.0	64.0	60.0	56.0	54.0	50.0	39.0						
6.0	52.0	52.0	50.0	49.0	48.0	37.0	30.0					
7.0	40.0	40.0	42.0	41.0	37.5	34.0	29.5					
8.0	32.0	30.0	32.0	33.0	33.5	31.5	27.0	24.0				
9.0	25.0	24.0	25.0	25.5	26.0	28.0	25.0	22.0	20.0			
10.0		18.0	19.0	20.0	22.5	23.0	22.5	21.0	18.5	16.5		
12.0		15.0	15.0	16.0	17.0	17.5	17.5	17.2	16.5	14.5	12.0	
14.0			10.0	11.0	11.5	12.0	13.0	13.5	13.5	13.0	11.0	10.5
16.0			8.0	9.0	9.5	10.0	10.5	10.8	11.0	10.5	10.0	10.0
18.0				7.5	8.0	8.5	8.5	8.8	9.0	9.0	9.0	9.2
20.0				5.5	6.0	7.0	6.5	6.8	7.0	7.2	7.3	7.5
22.0					5.0	5.5	5.2	5.5	5.8	6.0	6.0	6.2
24.0					3.5	4.5	4.2	4.5	4.6	5.0	5.0	5.2
26.0						4.0	3.5	3.5	3.8	4.0	4.2	4.2
28.0						3.0	3.0	3.0	3.2	3.5	3.5	3.8
30.0							2.2	2.2	2.5	3.0	3.0	3.0
32.0							2.0	1.9	2.0	2.5	2.5	2.6
34.0								1.5	1.5	1.8	2.0	2.0
36.0									1.2	1.2	1.5	1.5
38.0											1.2	1.2
40.0												
42.0												
44.0												
46.0												
48.0												
50.0												
Reeving	14	12	10	8	7	6	4	4	3	3	2	2
I	1	1	2	2	2	2	3	3	3	3	3	4
II	1	2	2	2	2	2	2	3	3	3	3	4
III	1	1	1	2	2	2	2	2	3	3	3	4
IV	1	1	1	1	2	2	2	2	2	3	3	4
V	1	1	1	1	1	2	2	2	2	2	3	4
Hook	90 t				55 t				20 t			

Table 1-3 Unit: Metric ton

Working radius (m)	Main boom (m)											
	0 t counterweight, outriggers fully extended, over full range											
	12.5	16.5	20.5	24.5	28.5	32.5	36.5	40.5	44.5	48.5	52.5	56.0
3.0	90.0	80.0										
3.5	84.0	75.0	70.0									
4.0	78.0	70.0	62.0	60.0								
4.5	68.0	67.0	60.0	58.0	50.0							
5.0	60.0	55.0	52.0	54.0	50.0	39.0						
6.0	47.0	45.0	45.0	44.0	42.0	37.0	30.0					
7.0	35.0	35.0	35.0	36.0	34.0	34.0	29.5					
8.0	25.0	26.0	26.0	26.0	26.5	26.5	26.0	22.5				
9.0	18.0	20.0	20.0	20.5	21.0	22.5	22.0	21.0	20.0			
10.0		16.0	16.0	16.5	17.0	18.5	18.0	18.0	18.0	16.5		
12.0		12.0	11.5	12.0	12.5	13.0	12.5	12.5	12.0	12.0	11.5	
14.0			7.5	8.0	8.5	9.0	9.2	9.2	9.0	9.2	9.5	9.5
16.0			5.0	6.0	6.5	7.5	7.3	7.1	7.0	7.2	7.5	7.6
18.0				4.5	5.0	5.5	5.4	5.4	5.2	5.5	6.0	6.0
20.0				3.0	3.5	4.3	4.0	4.0	4.0	4.2	4.5	4.8
22.0					2.5	3.2	2.8	2.8	2.8	3.0	3.5	3.8
24.0					1.5	2.5	2.0	2.0	2.2	2.5	3.0	3.1
26.0						1.5	1.4	1.3	1.5	1.5	2.0	2.2
28.0									1.0	1.1	1.5	1.6
30.0											1.0	1.0
32.0												
34.0												
36.0												
38.0												
40.0												
42.0												
44.0												
46.0												
48.0												
50.0												
Reeving	14	12	10	8	7	6	4	4	3	3	2	2
I	1	1	2	2	2	2	3	3	3	3	3	4
II	1	2	2	2	2	2	2	3	3	3	3	4
III	1	1	1	2	2	2	2	2	3	3	3	4
IV	1	1	1	1	2	2	2	2	2	3	3	4
V	1	1	1	1	1	2	2	2	2	2	3	4
Hook	90 t				55 t				20 t			

Table 1-4 Unit: Metric ton

Working radius (m)	Main boom (m)											
	15 t counterweight, outriggers intermediately extended, over full range											
	12.5	16.5	20.5	24.5	28.5	32.5	36.5	40.5	44.5	48.5	52.5	56.0
3.0	90.0	80.0										
3.5	84.0	75.0	70.0									
4.0	75.0	70.0	62.0	60.0								
4.5	70.0	60.0	58.0	56.0	50.0							
5.0	62.0	55.0	52.0	50.0	50.0	39.0						
6.0	42.0	40.0	38.0	38.0	38.0	36.0	30.0					
7.0	30.0	28.0	28.0	28.0	29.0	28.0	27.0					
8.0	25.0	24.0	24.0	24.0	24.5	25.0	24.0	24.0				
9.0	20.0	18.0	17.5	18.0	18.5	19.0	18.5	22.0	20.0			
10.0		15.0	14.5	15.0	15.5	16.0	16.0	18.0	17.5	16.5		
12.0		13.0	12.0	12.5	12.5	12.5	12.0	13.5	13.5	14.0	12.0	
14.0			9.5	9.8	10.0	10.5	10.0	10.5	10.5	10.7	10.7	10.5
16.0			6.0	6.5	7.0	8.2	8.0	8.5	8.5	8.8	9.0	9.0
18.0				5.0	5.5	6.0	5.5	6.5	6.5	6.8	7.0	7.0
20.0				4.0	4.5	4.8	4.5	5.5	5.8	5.9	6.0	6.0
22.0					4.0	4.5	4.0	4.5	4.7	4.8	4.9	5.0
24.0					3.0	3.5	3.3	3.5	3.7	3.8	3.9	3.9
26.0						3.0	2.5	3.0	3.0	3.2	3.4	3.4
28.0						2.5	2.3	2.5	2.5	2.6	2.8	2.8
30.0							1.8	1.6	1.8	2.0	2.2	2.3
32.0								1.2	1.3	1.5	1.8	1.9
34.0									1.0	1.3	1.5	1.6
36.0										1.0	1.3	1.3
38.0											1.0	1.1
40.0												
42.0												
44.0												
46.0												
48.0												
50.0												
Reeving	14	12	10	8	7	6	4	4	3	3	2	2
I	1	1	2	2	2	2	3	3	3	3	3	4
II	1	2	2	2	2	2	2	3	3	3	3	4
III	1	1	1	2	2	2	2	2	3	3	3	4
IV	1	1	1	1	2	2	2	2	2	3	3	4
V	1	1	1	1	1	2	2	2	2	2	3	4
Hook	90 t				55 t				20 t			

Table 1-5 Unit: Metric ton

Working radius (m)	Main boom (m)											
	7.5 t counterweight, outriggers intermediately extended, over full range											
	12.5	16.5	20.5	24.5	28.5	32.5	36.5	40.5	44.5	48.5	52.5	56.0
3.0	90.0	80.0										
3.5	84.0	75.0	70.0									
4.0	75.0	70.0	62.0	60.0								
4.5	65.0	63.0	60.0	58.0	50.0							
5.0	50.0	48.0	45.0	43.0	43.0	39.0						
6.0	35.0	34.0	33.0	32.0	32.0	32.0	30.0					
7.0	25.0	25.0	24.5	24.0	24.5	24.5	24.0					
8.0	19.0	19.0	19.0	19.0	20.0	21.0	20.5	20.0				
9.0	15.0	15.5	15.0	15.5	16.0	17.0	16.5	16.5	16.5			
10.0		13.5	13.0	13.5	14.0	15.0	15.0	15.0	15.2	15.0		
12.0		9.5	9.0	9.5	10.0	10.8	10.0	10.0	10.2	10.5	11.0	
14.0			6.5	7.0	7.5	8.0	8.0	8.0	8.2	8.5	9.0	9.0
16.0			5.0	5.3	5.5	6.0	5.8	5.8	6.0	6.5	6.8	6.8
18.0				4.0	4.5	5.0	4.5	4.5	4.6	4.8	5.0	5.0
20.0				3.0	3.5	4.0	3.5	3.5	3.5	3.6	4.0	4.0
22.0					2.5	3.0	2.5	2.5	2.6	2.8	3.2	3.2
24.0					1.8	2.0	1.8	1.8	2.0	2.3	2.5	2.5
26.0						1.8	1.5	1.5	1.6	1.8	2.0	2.0
28.0									1.2	1.5	1.5	1.5
30.0											1.2	1.2
32.0												
34.0												
36.0												
38.0												
40.0												
42.0												
44.0												
46.0												
48.0												
50.0												
Reeving	14	12	10	8	7	6	4	4	3	3	2	2
I	1	1	2	2	2	2	3	3	3	3	3	4
II	1	2	2	2	2	2	2	3	3	3	3	4
III	1	1	1	2	2	2	2	2	3	3	3	4
IV	1	1	1	1	2	2	2	2	2	3	3	4
V	1	1	1	1	1	2	2	2	2	2	3	4
Hook	90 t				55 t				20 t			

Table 1-6 Unit: Metric ton

Working radius (m)	Main boom (m)											
	0 t counterweight, outriggers intermediately extended, over full range											
	12.5	16.5	20.5	24.5	28.5	32.5	36.5	40.5	44.5	48.5	52.5	56.0
3.0	90.0	80.0										
3.5	84.0	75.0	70.0									
4.0	60.0	58.0	55.0	52.0								
4.5	48.0	45.0	42.0	40.0	40.0							
5.0	35.0	35.0	34.0	34.0	34.0	34.0						
6.0	25.0	25.0	24.5	24.5	25.0	25.5	25.0					
7.0	16.0	16.5	16.0	16.5	17.0	18.0	17.5	16.0				
8.0	13.0	13.5	13.0	14.0	15.0	15.5	15.0	15.0	15.0			
9.0	10.0	10.5	10.0	11.0	12.0	12.5	12.0	12.0	12.0			
10.0		9.0	8.5	9.0	9.5	10.0	9.5	9.5	9.5	10.0		
12.0		6.0	5.5	6.0	6.5	7.0	6.8	6.8	7.0	7.5	7.5	
14.0			3.5	4.0	4.5	5.0	4.8	4.8	4.9	5.0	5.3	5.5
16.0				2.5	3.0	3.5	3.4	3.4	3.5	3.8	4.0	4.0
18.0					2.0	2.5	2.3	2.3	2.5	2.8	3.0	3.0
20.0						2.0	1.8	1.8	1.9	2.1	2.3	2.3
22.0										1.5	1.5	1.5
24.0												
26.0												
28.0												
30.0												
32.0												
34.0												
36.0												
38.0												
40.0												
42.0												
44.0												
46.0												
48.0												
50.0												
Reeving	14	12	10	8	7	6	4	4	3	3	2	2
I	1	1	2	2	2	2	3	3	3	3	3	4
II	1	2	2	2	2	2	2	3	3	3	3	4
III	1	1	1	2	2	2	2	2	3	3	3	4
IV	1	1	1	1	2	2	2	2	2	3	3	4
V	1	1	1	1	1	2	2	2	2	2	3	4
Hook	90 t				55 t				20 t			

Table 1-7: (Jib, 15 t movable counterweight)

Unit: Metric ton

Main boom angle (°)	Main boom (m) + Jib (m), 15 t moveable counterweight				
	Outriggers fully extended, over side and over rear				
	56.0 + 10.5 m		56.0 + 18.5 m		56.0 + 24.5 m
	0°	30°	0°	30°	0°
80°	5.5	4.0	3.8	2.0	2.2
78°	5.5	3.8	3.6	2.0	2.2
76°	5.0	3.6	3.3	1.9	2.2
74°	4.5	3.4	3.0	1.9	2.1
72°	4.0	3.2	2.7	1.8	2.0
70°	3.8	3.0	2.5	1.8	1.9
68°	3.5	2.8	2.3	1.7	1.8
66°	3.3	2.6	2.2	1.6	1.7
64°	3.0	2.4	2.1	1.5	1.6
62°	2.9	2.3	2.0	1.5	1.5
60°	2.8	2.2	1.8	1.4	1.4
58°	2.6	2.1	1.7	1.4	1.3
56°	2.3	2.0	1.5	1.3	1.2
54°	2.1	1.8	1.3	1.1	
52°	1.8	1.6	1.1		
50°	1.6	1.4			
Reeving	1				
Hook	7 t auxiliary hook				

Table 1-8: (Jib, 15 t movable counterweight)

Unit: Metric ton

Main boom angle (°)	Main boom (m) + Jib (m), 15 t moveable counterweight			
	Outriggers intermediately extended, over side and over rear			
	56.0 + 10.5 m		56.0 + 18.5 m	
	0°	30°	0°	30°
80°	5.0	3.5	3.5	1.6
78°	5.0	3.5	3.2	1.6
76°	5.0	3.5	3.0	1.6
74°	4.5	3.2	2.8	1.5
72°	4.0	3.0	2.6	1.4
70°	3.5	2.8	2.5	1.4
68°	3.2	2.6	2.3	1.3
66°	2.7	2.3	1.8	1.2
64°	2.3	2.0	1.4	1.1
62°	1.9	1.7	1.2	
60°	1.6	1.4		
58°	1.3	1.1		
56°	1.1			
54°				
52°				
50°				
Reeving	1			
Hook	7 t auxiliary hook			

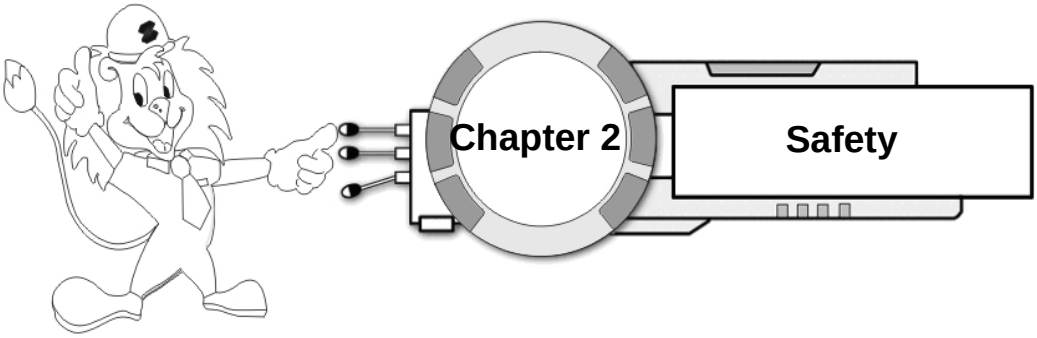

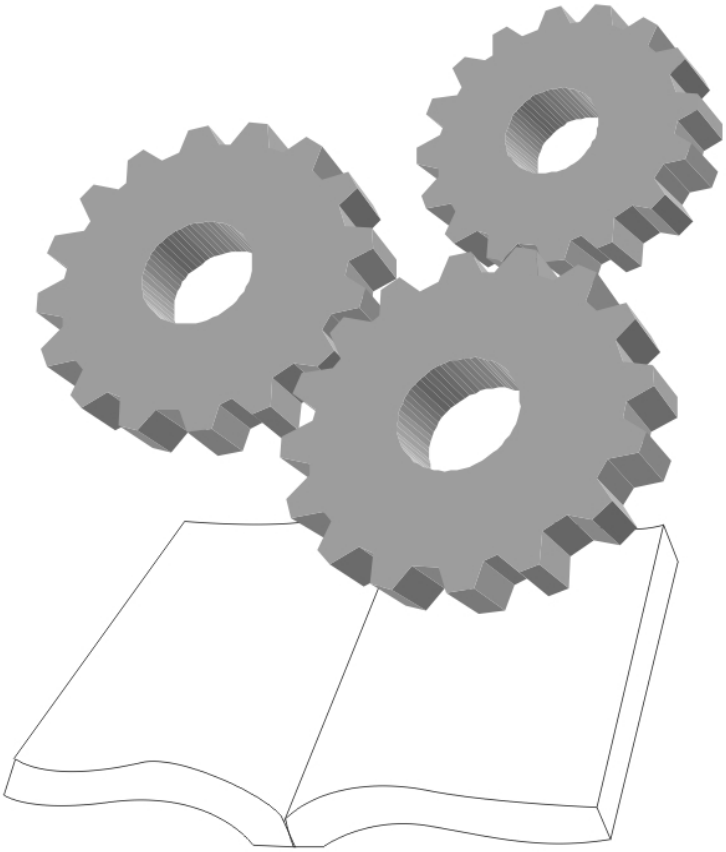

ZOOMLION

2.1 Traffic regulations

The crane is approved for road travel when used in accordance with national and regional traffic regulations. No person is allowed to stay in operator's cab during driving. The crane must be made to comply with the relevant local traffic regulations, before it is driven on public streets, roads and other places. The weights, axle loads and dimensions specified in the permits must be maintained.

The technically feasible axle loads may be different from those permitted by local road traffic regulations. In countries where EEC specifications apply, axle loads greater than 12 t are not permitted for road and highway traffic.

Danger:

(1) If the axle loads or total weight exceed the permits, any increase in axle load and total weight reduces braking performance in direction proportion to the excess weight;

(2) Brake lining wear is greater and risk of brake overheating in higher;

(3) The steering system, driving brake, parking brake and reducer will not comply with the relevant regulations;

(4) Lives of all components such as brakes, axles, rims, suspension cylinders as well as bearings are shortened;

(5) No person is allowed to stay in operator's cab during driving.

A hook block may only be transported at the front of driver's cab if:

a) It has been reeved no more than four times;

b) It has been lashed using the auxiliary rope provided on the front towing coupling.

Danger:

Do not allow the hook block to impair the driver's field of vision when driving the crane on public roads!

2.2 Break-in instructions

The crane should break-in after delivery. Please observe the following specifications:

a) Continuously monitor the temperature and oil pressure indicators while driving!

Warning:

Stop immediately if there are any fault indications!

b) Perform the following checks after the first 50 km and 100 km:

1) Make sure that wheel nuts are tight and do not over-tighten them (maximum permissible torque is 600 N.m);

2) Check engine water and oil levels;

3) Check transmission, transfer case and drive axle oil levels;

4) Visually inspect engine, transmission device and axles for any leakage or loose components;

5) Check that drive axles are properly seated;

6) Check that the steering mechanism and suspension devices are properly seated;

7) Check that there are no other loose chassis components;

8) Visually inspect tire condition and inflation.

c) Breaking in the brake linings:

To achieve optimum braking performance, all new brake linings must be broken in by activating the brakes. Activate the brakes by pumping them at low to medium speed. Hard braking is not permitted. In general, the break - in distance depends on the type of vehicle, but a minimum of 500 km is recommended. During this phase, the maximum brake drum or braking lining temperature may not exceed 200^{0}C. The temperature rise resulting from each individual braking action should not exceed 15% of maximum.

Danger:

The risk of accident increases when new brake linings are subjected to one or more braking operations over extended period of time or if the vehicle is forced to a stop by hard braking from high speed several times. Hard braking and continuous braking are not permitted!

d) During the initial phase, all components of crane are in break-in state. During the first 100h, the working load should not be too great and working speed should not be too high, the maximum lifting capacity should not exceed 80% of the rated one and it is not permitted to work at maximum speed.

2.3 Planning crane operation

In addition to a perfectly working crane and a well-trained crew, crane operation planning is an important principle of safe crane operation.

The crane operator must obtain or receive the necessary information in a timely fashion before driving to the work site. In particular:

a) Type of crane operation;

b) Work site and travel distance;

c) Route;

d) Height and width clearance measurements;

e) Electric transmission lines (including voltages);

f) Space restrictions at the work site;

g) Movement restrictions caused by buildings;

h) Weight and dimensions of the load(s) to be lifted;

i) Required hoisting height and boom projection;

j) Ground bearing capacity at the work site.

Based on the above information, the crane operator must assemble the equipment required to operate the crane:

a) Hook block / load hook;

b) Separate lifting accessories;

c) Counterweight;

d) Jib;

e) Underlay materials for support pads.

Warning:

Crane operation may not be possible or improvisation can result if a crane operator does not have all the required data.

2.4 General safety technical guidelines

2.4.1 Requirements of the crane operator and conductor

The primary responsibility of crane operator and conductor is to control, operate, adjust the crane and conduct the operation in a manner that is safe for both himself and others. The main operating errors, which are made again and again while operating or driving a crane, are as follows:

a) Slewing too quickly;

b) Quick braking of the load;

c) Diagonal pulling when the load is still on the ground;

d) Loose wire rope formations;

e) Overloading;

f) Crashing into bridges, roofs or high voltage wiring due to insufficient vertical clearance;

g) Unsuitable operation when lifting a load with several cranes at the same time.

About 20% of accidents are caused by improper maintenance:

a) Insufficient lubricating oil, lubricating grease or antifreeze;

b) Broken wire ropes, worn parts;

c) Emergency limit switches or load moment limiter not operating properly;

d) Brake or transmission failure;

e) Hydraulic defects (for example: cracked hoses);

f) Loose bolts.

Danger:

In the interest of both yourself and others, make sure you understand how your crane operates and familiarize yourself with all the risks associated with the work to be done.

Qualifications for operator and conductor are as follows:

2.4.1.1 Operator

a) The driver with authorized certificate;

b) The person who has been trained at least half a year under qualified personnel's supervision;

c) The maintenance personnel and inspectors who need to operate the crane for a task;

d) Healthy and agile;

e) Eyesight (remedied eyesight included) is above 0.7, no color blindness;

f) Hearing is qualified;

g) Has the ability to estimate and monitor load is enough;

h) The operator must be familiar with the operating instructions for the crane, and know the working principle, structural performance, functions and adjusting methods for the safety devices, as well as master the operation essentials and maintenance skills;

i) Crane operator and conductor should be familiar with safety rules, safety signals and symbols;

j) Be qualified with the work in hearing, eyesight and reaction ability; have the requisite physical to operate the crane safely; and has the ability to estimate distance, height and clearance correctly;

k) Know how to administer first aid and know how to use a fire extinguisher; know how to survive in an emergency.

Make sure that only the personnel who are qualified and authorized are allowed to operate the crane.

Danger:

(1) Operator should check brakes, hook, wire rope and safety devices before operation. If there is something abnormal, fix it as soon as possible;

(2) The operator must focus his attention on his work during operation and is forbidden to chat with others. Generally speaking, operator can only follow the signal sent out by appointed persons. However, for a stop signal, the operator should obey it at all times, no matter who send it out. He should refuse to follow signal which violates operation regulations. Stop the crane immediately if somebody is found climbing the crane;

(3) Operator who is in low spirits or poor health is not allowed to operate the crane. Prohibit drinking and driving.

2.4.1.2 Rigger

During operation of the machine, the rigger is responsible for ensuring that the load is slung or released safely and carefully and decides which loading equipment and lifting accessories are to be used in accordance with work plan. Rigger is also responsible for conducting safe operation of the crane.

A qualified rigger should meet the following criteria:

a) With crane operation certificate;

b) Be qualified with the work in hearing, eyesight and reactivity;

c) Have the requisite physical strength to carry the loading equipment and lifting accessories;

d) Be able to estimate the load mass, balance the load and judge the distance, height and clearance correctly;

e) Have been trained in the skill of handling load;

f) Be able to choose the proper loading equipment and lifting accessories according to conditions of the load;

g) Have been trained in hand signals for operation and is familiar to use them;

h) Be able to safely use audio equipment (such as interphone) to send out oral order exactly and clearly;

i) Be capable of conducting the operating of crane to move the load safely;

j) Make sure that only authorized personnel are allowed to carry out work.

2.4.1.3 Signal person

The signal person is to transfer signal from the rigger to operator. He can substitute for the rigger to do conducting and rigging work, but such work can only be done by one person at any time.

A qualified signal person should meet the following criteria:

a) Be qualified with the work in hearing, eyesight and reactivity;

b) Be able to estimate the distance, height and clearance correctly;

c) Have been trained in hand signals for operating and is familiar to use them;

d) Be able to safely use audio equipment (such as interphone) to send out oral order exactly and clearly;

e) Be capable of conducting crane operation to move the load safely;

f) Make sure that only authorized personnel are allowed to carry out work.

2.4.2 Selecting an operating site

It is very important to choose an appropriate location for crane operation in order to minimize safety risks. When selecting the placement location of the crane, observe the following:

a) The operation of the crane can be carried out within the necessary radius (working radius and counterweight slewing radius);

b) Support the crane and other things only on ground with sufficient load bearing capacity.

2.4.2.1 Slopes and ditches

The crane may not be set up too close to slopes or ditches. Maintain adequate safety clearances in accordance with the type of soil. The formula for calculating the safety clearance is as following:

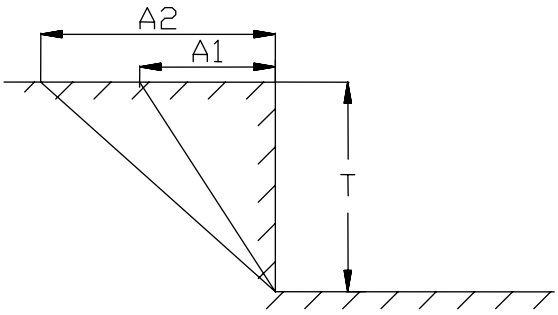

For non-cohesive and soft cohesive ground:

$A_2=2T$

For stiff or semi-solid cohesive ground:

$A_1=T$

T refers to the depth of ditch.

Danger:

If the safety distance can not be maintained, fill and level up the slope and ditch. Otherwise the crane can topple over!

2.4.2.2 Permissible ground pressure of outrigger

When the crane is supported, the outriggers transmit significant forces to the ground. In certain cases, a single outrigger has to transmit almost the entire weight of the crane, plus the load weight, to the ground.

The ground must be able to safely absorb this pressure every time. If the outrigger pad area is inadequate, then it must be supported from below according to the load bearing capacity of the ground. The required support area can be calculated as follows:

Support area = crane support force / load bearing capacity of the ground

Warning:

Even though the crane is supported by several outriggers together, the ground pressure of outrigger should be calculated from the total weight of crane on one outrigger. The maximum pressure on the front and rear outriggers will not exceed the value referred in Section 1.3.3.

Permissible ground pressure is shown in the following table:

Soil type		Permissible ground pressure (kg / cm^2)
A	Back-filled, not naturally compacted ground	0 - 1
B	Natural, clearly undisturbed ground:	
	1. Mud, peat, marshy soil	0
	2. Non-cohesive ground, sufficient compactly layered soil Fine to medium grained sand Coarse-grained sand to gravel	 1.5 2.0
	3. Cohesive ground: Sludgy Soft Firm Semi-compact Hard	 0 0.4 1.0 2.0 4.0
	4. Rock with few fissures, in healthy, unweathered condition and in a favorable location: In cohesive layer order In massive or column-style shape	 15 30
C	Artificially compacted ground:	
	1. Asphalt	5 -15
	2. Concrete Concrete group B I Concrete group B II	50 - 250 350 - 550

If there is any doubt about the load bearing capacity of the ground at the placement site, soil tests should be carried out, for example with a penetrometer.

Caution:

Only strong materials may be used for the outrigger pad bases; for example properly dimensioned wooden timbers. In order to ensure that pressure is evenly distributed over the base surface, the outrigger pads must be positioned in the center of the support base.

2.4.3 Supporting

a) Before operation, all the wheels must be away from the ground;

b) Before extending the vertical outriggers, extend the horizontal outriggers to the specified positions;

c) All the outriggers must be extended according to the data in the lifting capacity table and secured by pins;

d) Before operation, the crane must be leveled. Under any working conditions, the inclination angle of the crane can not be more than 0.6°.

Danger:

If the crane is positioned at an incline, and if the boom is turned towards the slope, then the radius is increased as a result. It is possible that the crane can topple over in extreme cases.

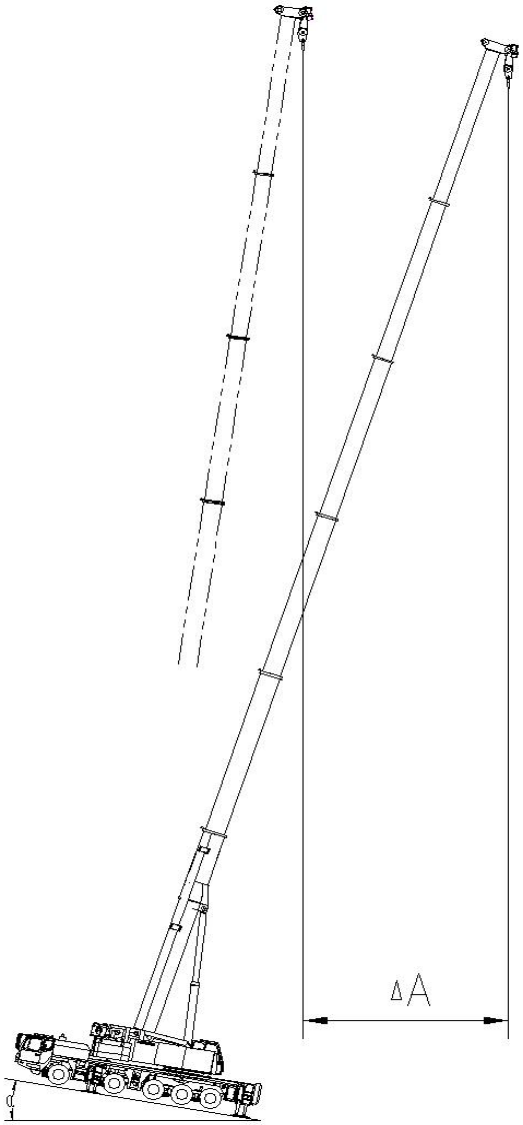

After the crane is supported, check the following safety measures:

a) The placement location has been selected in such a way that the crane can be operated with the least possible radius;

b) The load bearing capacity of the ground is adequate;

c) There is sufficient distance to ditches and slopes;

d) All outriggers have been extended to their specified positions;

e) The outriggers are secured with pins;

f) The outrigger pads are secured;

g) The crane is aligned horizontally;

h) The axles are relieved, which means the tires do not touch the ground;

i) It has been ensured that there are no live electrical wires within the working range of the crane;

j) There are no obstacles which will hinder the required crane movements.

2.4.4 Working conditions

a) Pay attention to the ambient temperature in the work site. The suitable temperature range is -20℃ - + 40℃. Excessive high or low temperature will damage the components of crane;

b) If wind speed is higher than the maximum permissible wind speed (13.8m/s, grade 6) for the crane operation, it is prohibited to lift a load;

c) In case of thunderstorms, stop working on the crane immediately and telescope the boom in and bring it into driving condition.

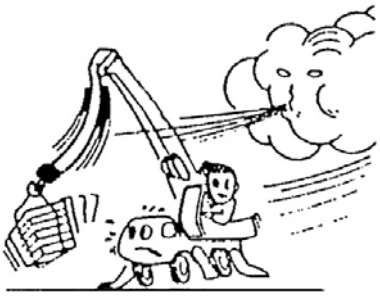

Danger:

Operate the crane according to the above instructions, otherwise accidents may occur!

With the following table, the wind force and wind speed can be estimated correctly:

Wind force		Wind speed		Effect of the wind on the land
Beaufort	Description	m/s	km/h	
0	Calm	0 - 0.2	0 - 0.9	No wind, smoke rises vertically
1	Light air	0.3 - 1.5	1 - 5	Wind direction shown by smoke drift but not by wind vanes
2	Light breeze	1.6 - 3.3	6 - 11	Wind felt on face, leaves rustle, vanes moved by wind
3	Gentle breeze	3.4 - 5.4	12 - 19	Leaves and small twigs in constant motion, wind extends light flag
4	Moderate breeze	5.5 - 7.9	20 - 28	Raise dust, loose paper, small branches moved
5	Fresh breeze	8 - 10.7	29 - 38	Small trees in leaf begin to sway, crested wavelets on inland water
6	Strong wind	10.8 - 13.8	39 - 49	Large branches in motion; difficult to use umbrellas, whistling heard in telegraph wires
7	Near gale	13.9 - 17	50 - 61	Whole trees in motion, difficult to walk against the wind
8	Gale	17.2 - 20.7	62 - 74	Breaks twigs off trees, impedes progress
9	Strong gale	20.8 - 24.5	75 - 88	Slight structural damage (roof tiles and chimney covers, etc. blown off)
10	Storm	24.6 - 28.3	89 - 102	Trees uprooted, considerable damage occurs
11	Violent storm	28.4 - 32.6	103 -117	Widespread damage
12	Hurricane	32.7 - 36.9	118 -133	Severe devastation

d) Strong electromagnetic fields are likely to be present if the construction site is close to a transmitter. Under this condition, consult a high frequency specialist or contact with the local franchiser or the manufacturer.

Danger:

Electromagnetic fields can pose direct or indirect danger to persons, equipment and objects, for example, effect on human organs due to radiation and spark or electric arc formation.

In order to minimize the danger due to high frequency radiation, operator should operate the crane according to the following instructions:

1) Every crane must be totally grounded. Check visually or with a simple tester to ensure that ladder, cab and wire rope are grounded;

2) All personnel working on the crane or with large metal objects must protect themselves from burns by wearing non-conductive synthetic gloves and suitable clothing while working;

3) There is no need to panic if you feel your hand warm up. Always work under the assumption that the respective workpiece, structural steel member or support is hot;

4) The temperature of objects affected by high frequency radiation depends on their size. Cranes, carriers and coverings, for example, are hotter;

5) Contact with other crane loads is not permitted when operating the crane.

Otherwise, electric arc may occur and the wire rope will be damaged. At this time, check the wire rope immediately.

6) An insulator is required at all times between the crane load hook and loading equipment. Do not touch the wire rope above the insulator;

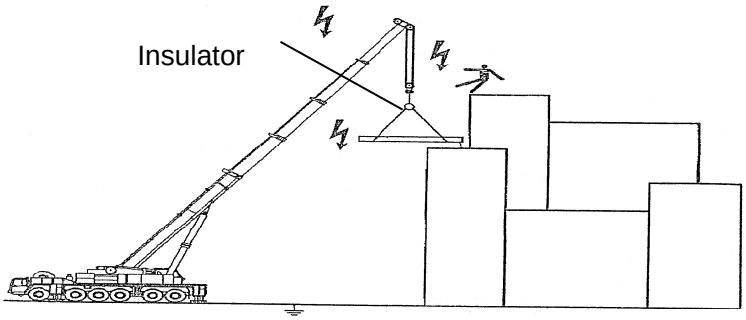

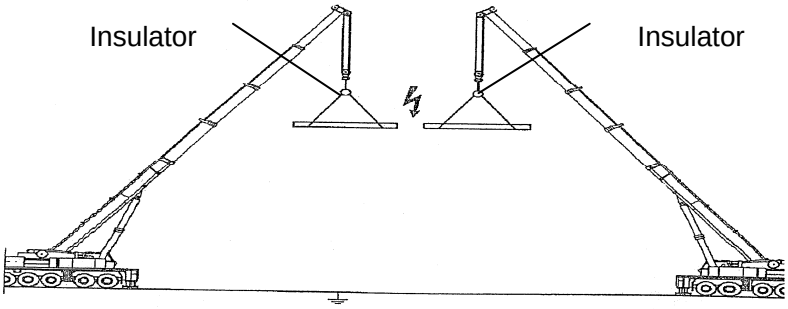

7) Loads that are attached to the crane may not be touched by any unprotected parts of the body after the load has been lifted or set down;

8) Do not work with a bare upper torso or in short pants, this is prohibited;

9) To minimize absorption of high-frequency radiation, larger loads should be transported horizontally if possible;

10) Loads must be grounded, or additional insulation used (rubber material between the object and gloves) when manual work is required;

11) Use a suitable measuring instrument to check the temperature of the object. If, for example 500V can be measured on a tool at a distance of 1cm to 2cm, then the tool may not be touched with bare hands;

12) To avoid secondary accidents, use a seat belt when working on structures that are high off the ground;

13) Handling explosive matter (such as refueling) may only be done at least 6m away from the place where sparks could form due to handling of larger metal parts. Use only conductive rubber hoses to refuel;

14) Any accidents and unexpected events must immediately be reported to the local construction supervisor and safety engineer.

2.4.5 Points for attention

Before beginning any work, the crane operator must make sure that the crane is in safe operating condition. All safety devices, such as load moment limiter, hoisting limit switch, lowering limit switch, brakes, etc., are in good working order.

The load moment limiter must be adjusted according to the current crane configuration. The loads given in the lifting capacity table may not be exceeded. The loading equipment, load carriers and ropes must be in accordance with specified requirements. The weight of the hook and loading equipment must be subtracted from the load given in the lifting capacity table.

The counterweight required depends on the weight of the load to be lifted and the boom radius required for operation. The deciding factor for the selection of the counterweight is the data in the corresponding lifting capacity table.

Danger:

The crane may topple over if the counterweight is not installed according to the lifting capacity table!

Danger:

When lifting a load, reeving of wire rope should be in accordance with the data in lifting capacity table. Otherwise the wire rope may break off and the winch reducer and motor may be damaged.

Pay special attention to the following items:

a) No person is allowed to stand under the boom during operation;

b) No person is allowed to stand on slewing table;

c) No standing within slewing radius;

d) Prohibit lifting a load without outriggers;

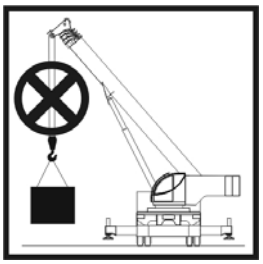

e) The inclination angle of the crane can not be more than 0.6° during operation;

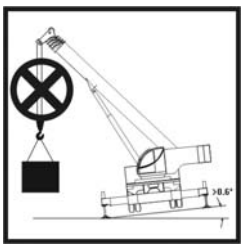

f) Never allow people to stand beneath swaying loads;

g) Never carry people on the load or on lifting equipment;

h) Prohibit overloading and do not pull load at an angle. Forbid lifting staggered load;

i) Prohibit lifting load buried in ground or frozen on the ground;

j) It is forbidden to drive with a load;

k) It is forbidden to drive with movable counterweight;

l) It is forbidden to telescope the boom with a load;

m) Under any conditions, wire rope on the winding drum is not allowed to be less than 3 windings;

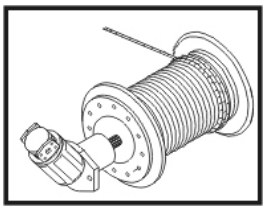

n) Never adjust the brake of hoist mechanism during lifting a load;

o) The operator is not permitted to leave the operator's cab when the load is suspended in the air;

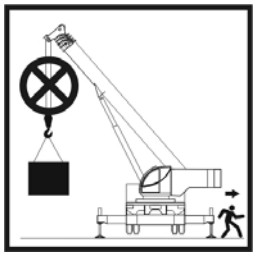

p) When working in the vicinity of power cables, a sufficient safety clearance must be maintained if the power is not cut off or the hazardous area is not covered or fenced off;

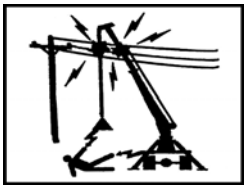

Rated voltage (kV)	Minimum safe distance (m)
＜1	1
1 - 110	3
110 - 220	4
220 - 380	5
If rated voltage is unknown	5

If, despite all precautions having been taken, a flashover occurs, carry out the following procedure:

1) Keep calm;

2) Do not leave the cab;

3) Warn those around the crane not to move and not to touch the crane;

4) Move the boom away from the danger area.

q) The operation should be stable and gentle. Do not carry out any jerky movements with the joysticks; avoid any sudden acceleration or braking or conversion operation;

r) Checks on the crane should be carried out from time to time during operation. Once there is any abnormity, find out the reasons and fix them;

s) When the actual lifting load reaches 90% of the rated one, the buzzer will sound the alarm. At the time, much attention should be paid to the operation;

t) No modification of the crane is allowed. Otherwise the person will take the consequence himself;

u) Under normal conditions, it is prohibited for a load being lifted by two or above two cranes at the same time. But if this operation is needed under special conditions, it should comply with the regulations stipulated in GB6067-85, as follows:

1) Wire ropes must be vertical;

2) Hoisting / lowering operations of each crane must be kept synchronized;

3) The maximum load weight lifted by each crane must not exceed their respective rated lifting capacities.

If above requirements cannot be fulfilled, decrease the rated lifting capacity to its 80%. During lifting work, the chief engineer must be on site to command the operation.

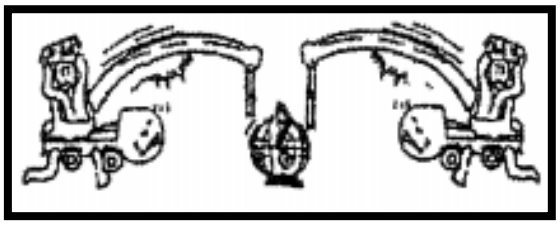

Warning:

Stop working if one of the following instances occurs:

(1) The crane is overloaded or the load weight is uncertain;

(2) The load may fall off because it is secured or hanged loosely or unevenly;

(3) There is no lining pad between the edges of load and wire rope;

(4) The lighting in the work site is dim and the load or the signal can not be seen very clear;

(5) There is defect or damage of structure and components which will impair the safety of the crane, such as failure of brake and safety devices or damage of wire rope.

2.5 Signs on the crane

There are many safety signs on the crane. The meaning of each of them is as follows:

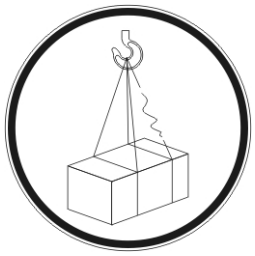

Warning: Swinging load

Note: Lifting point

Caution: Risk of falling

Prohibited: No access for unauthorized personnel!

Prohibited: No entry

Danger: Crushing / Collision

Danger: Snagging / Dragging

Danger: Crushing / Shearing

Danger: High temperature / Do not touch

Prohibited: Naked flame

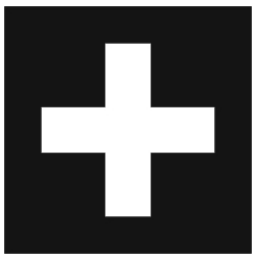

Note: First-aid kit

Note: Fire extinguisher

Note:

There is an emergency hammer in operator’s cab. Use the hammer to break the glass to survive in an emergency.

2.6 Hand signals

For all movements, the crane operator must always keep the load, as well as the crane hook or loading equipment when the crane is not loaded, in his field of vision. If this is not possible, the crane operator may only operate the crane if he is signed by an assigned conductor. The operator may be guided by hand signals or an interphone. It is absolutely essential that there be no misunderstandings.

Warning:

Danger of accident caused by misunderstood hand signals! Hand signals must be mutually agreed upon and clearly executed!

We recommend using the hand signals described on the following pictures for the sake of safe operation.

1. Start

Hold the right arm stretched vertically upwards. The palm faces forwards.

2. Use main winch

Tap fist on head; then use regular signal.

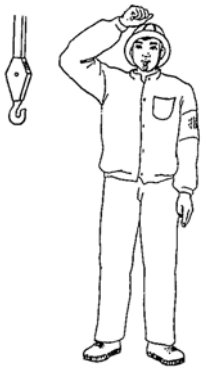

3. Use auxiliary winch

Tap elbow with one hand; then use regular signal.

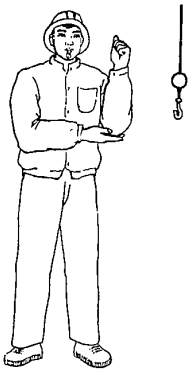

4. Lift the load

With forearm vertical, extended fingers pointing up, move hand in small horizontal circle.

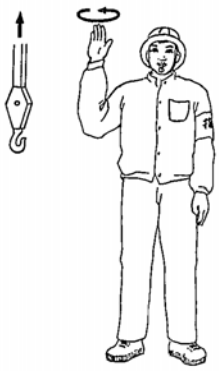

5. Lower the load

With arm extended downward, forefinger pointing down, move hand in small horizontal circle.

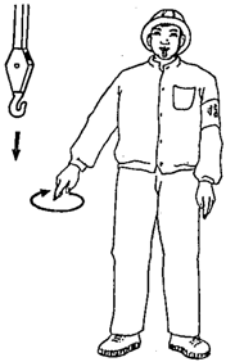

6. Lift the load slowly

With forearm vertical, palm of the hand facing upwards, wave hand up repeatedly.

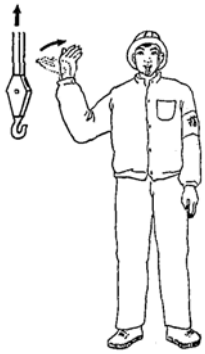

7. Rotate

Turn left: With right forearm vertical, the palm of the hand facing outwards, lower the forearm sideways horizontally, fingers pointing in the direction of rotation.

Turn right: With left forearm vertical, the palm of the hand facing outwards, lower the forearm sideways horizontally, fingers pointing in the direction of rotation.

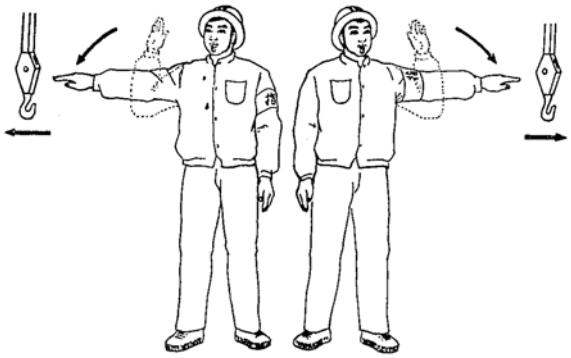

8. Lower the load slowly

With arm extended downwards with a 30° angle to the body，palm of the hand facing downwards, wave hand down repeatedly.

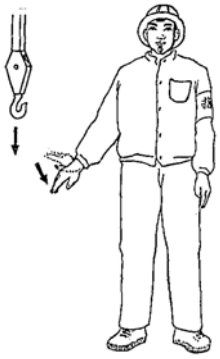

9. Rotate slowly

Turn left: With right forearm vertical, the palm of the hand facing outwards, move forearm horizontally and repeatedly, fingers pointing in the direction of rotation.

Turn right: With left forearm vertical, the palm of the hand facing outwards, move forearm horizontally and repeatedly, fingers pointing in the direction of rotation.

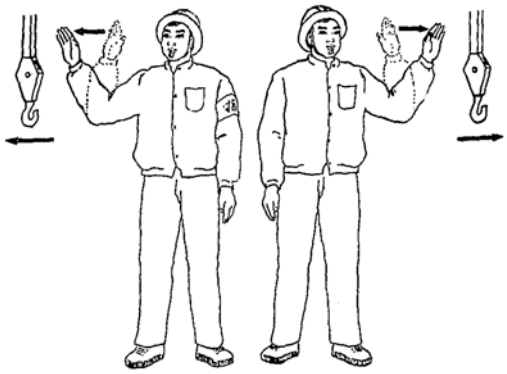

10. Indicate load lowering position

Extend the fingers to point at the position the load should fall on.

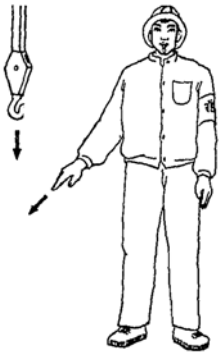

11. Raise boom

Arm extended, finger closed, thumb pointing upward.

12. Lower boom

Arm extended, finger closed, thumb pointing downward.

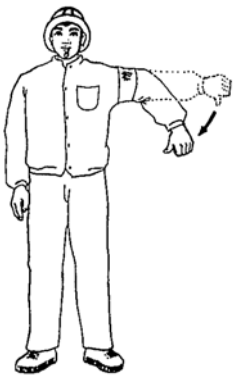

13. Raise boom slowly

Forearm extends in front of body with palm facing downwards, another hand moves up and down with thumb pointing upwards.

14. Lower boom slowly

Forearm extends in front of body with palm facing
upwards, another hand moves up and down with thumb pointing downwards.

15. Extend boom

Both fists in front of body with thumbs pointing outwards.

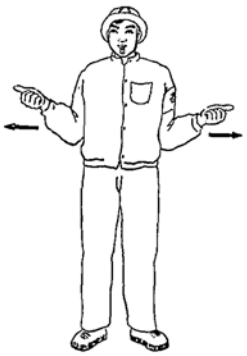

16. Retract boom

Both fists in front of body with thumbs pointing toward each other.

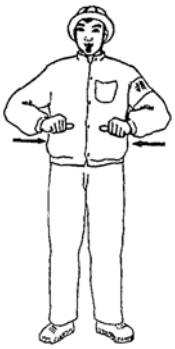

17. Stop

Arm extended, palm down, and move
the arm back and forth horizontally.

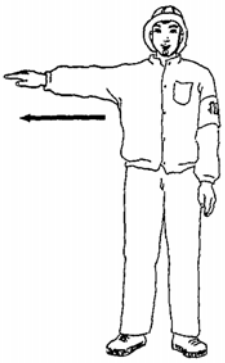

18. Emergency stop

Both arms extended, palms down,
move arms back and forth horizontally.

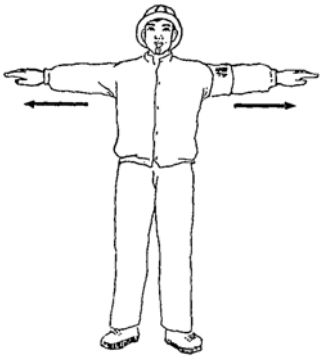

19. End a movement

Cross your hands in front of your forehead.

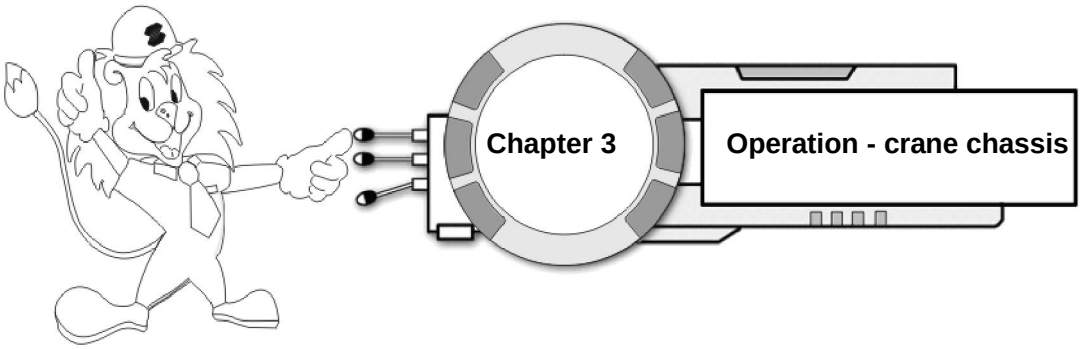

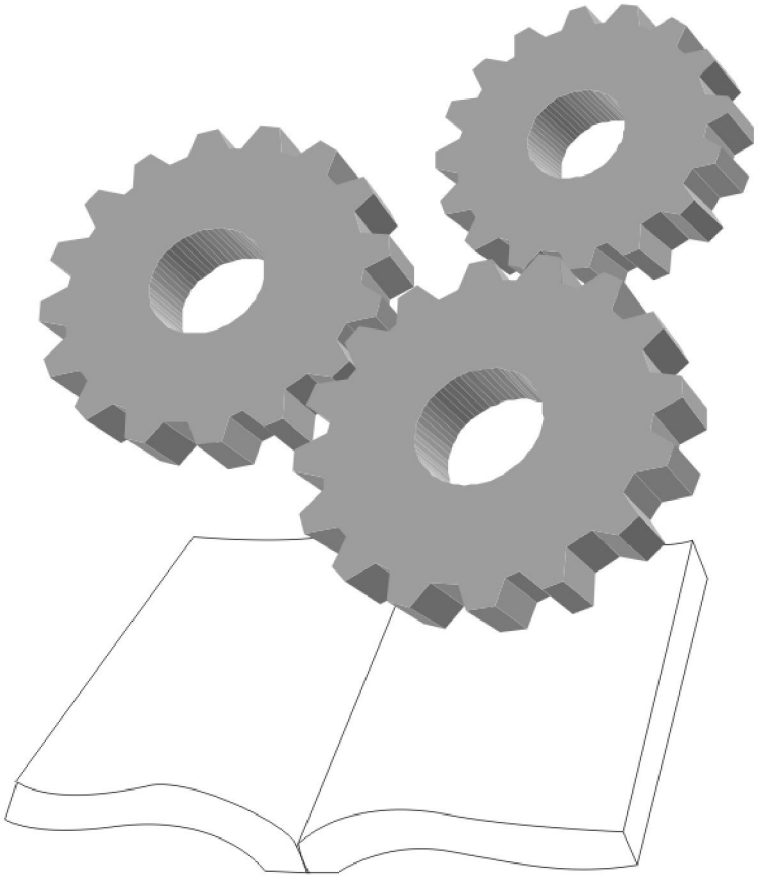

ZOOMLION

3.1 Vehicle operating and control instruments

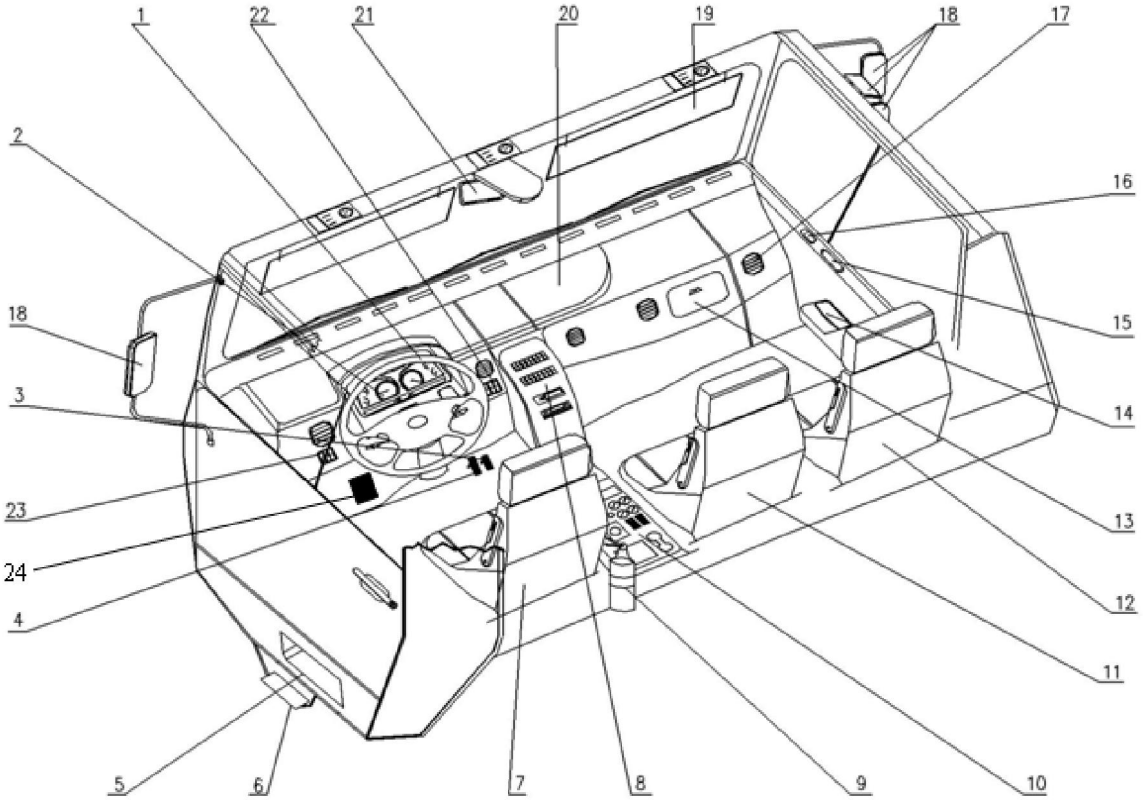

1. Steering wheel
2. Display unit
3. Foot pedal (R): Engine control
4. Foot pedal (L): Service brake
5. Footboard 2
6. Footboard 1
7. Driver's seat
8. Keyboard
9. Extinguisher
10. Center console
11. Passenger's seat
12. Co-driver's seat
13. Fuse box
14. Glove compartment
15. Inside door handle
16. Inside door switch
17. Outlet nozzles
18. Outside mirrors (left and right)
19. Sun visor
20. Toolbox
21. LCD
22. Buttons on the right side
23. Buttons on the left side
24. Foot pedal: Clutch

3.1.1 Steering wheel

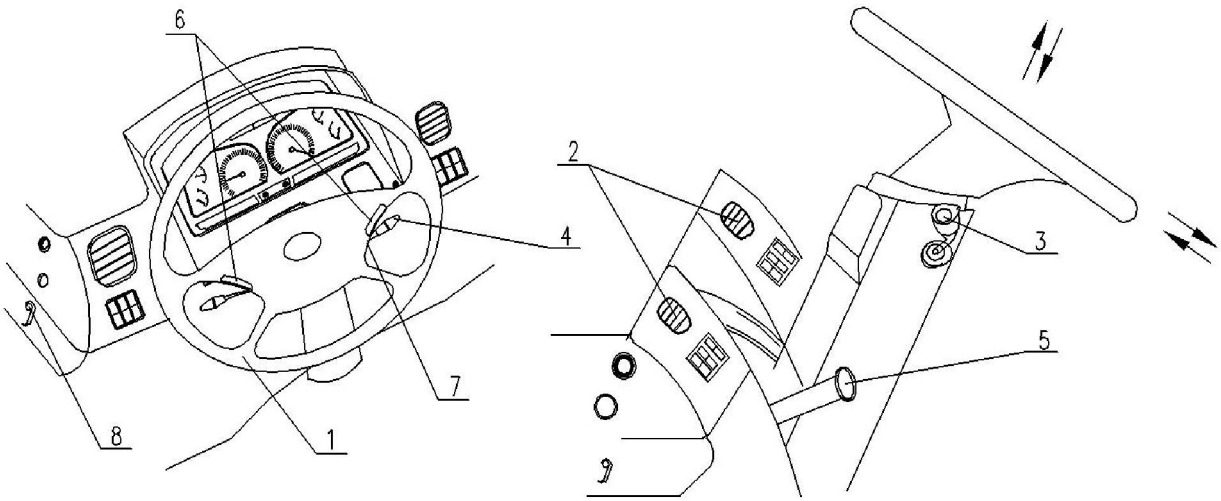

1. Steering wheel
2. Outlet nozzles

   There are several outlet nozzles arranged on different positions of the instrument panel in the driver's cab for ventilation. The rotary switches can regulate the ventilation direction and speed.

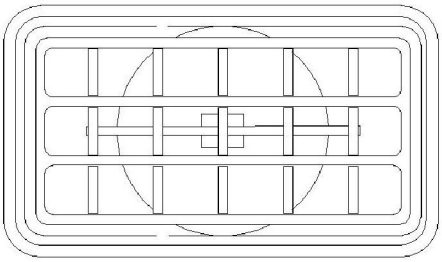

3. Left-hand steering column switch

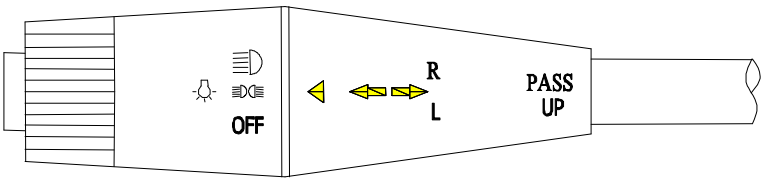

1) Turn signal activation (left / right)

   Jog steering column forwards: right turn signal lights up.

   Jog steering column backwards: left turn signal lights up.

2) Switch from low beam to high beam and operate headlamp flasher

   If need to pass over the other vehicles, jog the switch upwards in the high beam position. The high beam and low beam of the headlamp will light up simultaneously.

   Jog the switch upwards and downwards continuously and the lamp will flash to remind the front vehicle.

   No matter what working conditions other lamps are in, once the headlamp flasher is on, the headlamp will light up.

   Jog the steering column switch upwards and downwards to activate from low beam to high beam.

3) Lighting switch

Rotate the end of the steering column switch towards the driver.

The first stage is to activate the front position lamps, rear position lamps, front corner marker lights, rear corner marker lights, license plate lamp and operating instrument lamp.

The second stage is to activate the headlamp.

4. Right-hand steering column switch

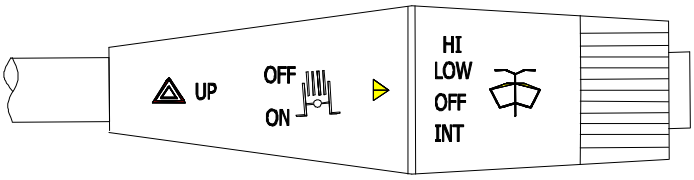

1) Activate windshield wiper

Rotate the end of this steering column switch to activate the windshield wiper. The windshield wiper has 4 stages:

HI: High speed

LOW: Low speed

OFF: Off

INT: Intermittent

2) Activate windshield wiper washer system

Press the button on the end of this steering column switch. The washer and wiper begin to work. They will not stop working until the button is released.

Caution:

If the washer continues working for 15 seconds or the washing fluid container is empty, the wiper will stop its work. Use the wiper with washer in sunny days. In cold days, precautions should be adopted to prevent the wiper from freezing on the windshield.

3) Activate engine retarder and exhaust brake

Jog the switch backwards to activate engine compression brake and auxiliary exhaust brake after the engine RPM exceeds 1100RPM. The retarder control light illuminates.

Jog the switch forwards to switch off engine compression brake and auxiliary exhaust brake. The retarder control light extinguishes.

Caution:

Never apply engine control when retarding brake is activated. Otherwise the auxiliary exhaust brake and engine compression brake will be deactivated automatically!

4) Activate parking signal

Jog the switch upwards to make the left and right turn signals flash simultaneously, thus to activate the parking signal.

5. Steering wheel adjustment handle

The height and angle of the steering wheel can be adjusted by the driver. Pull the adjustment handle upwards to adjust the height and angle of the steering wheel.

Caution:

a. Risk of fatal injury if adjust the steering wheel while driving!

b. Pull the handle downwards to lock the steering wheel after adjustment.

6. Horn

1) Electric horn

It is in the central area of the steering wheel. Press either of the two buttons on the left or right side of the central area to activate the electric horn.

2) Air horn

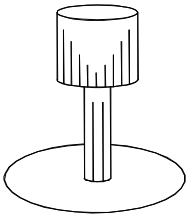

This button is situated on the side of driver's left foot.

Press: Air horn alarms.
Release: Air horn stops alarming.

7. Ignition starter switch

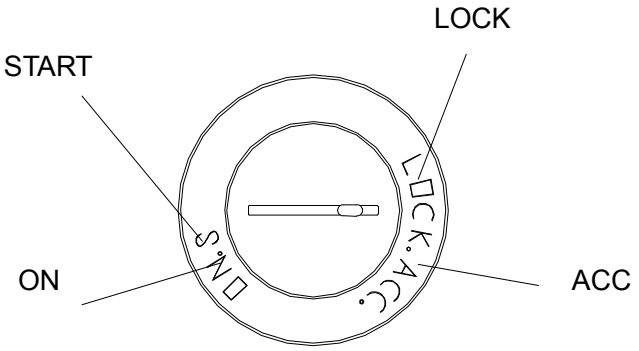

Ignition starter switch has 4 stages: LOCK, ACC, ON, and START.

LOCK: No electricity is supplied to the entire electrical system. The key can be plugged in and pulled out.

ACC: Turn the key to ACC if cigarette lighter and DVD need to be activated without engine running. If turn the key to ACC during engine running, the engine will be shut down.

ON: The entire electrical system is electrified.

START: Turn the key from ON to S to start the engine. Once the engine is started, release the key to ON.

Caution:

If the key is not in the position LOCK, it cannot be pulled out.

8. Switch Front cover opened

Pull the switch towards the driver to open the front cover of the driver’s cab from which to check and repair the electrical elements and air conditioning, and add fluid to the windshield washing fluid container. Push down the cover to close it.

3.1.2 Display unit

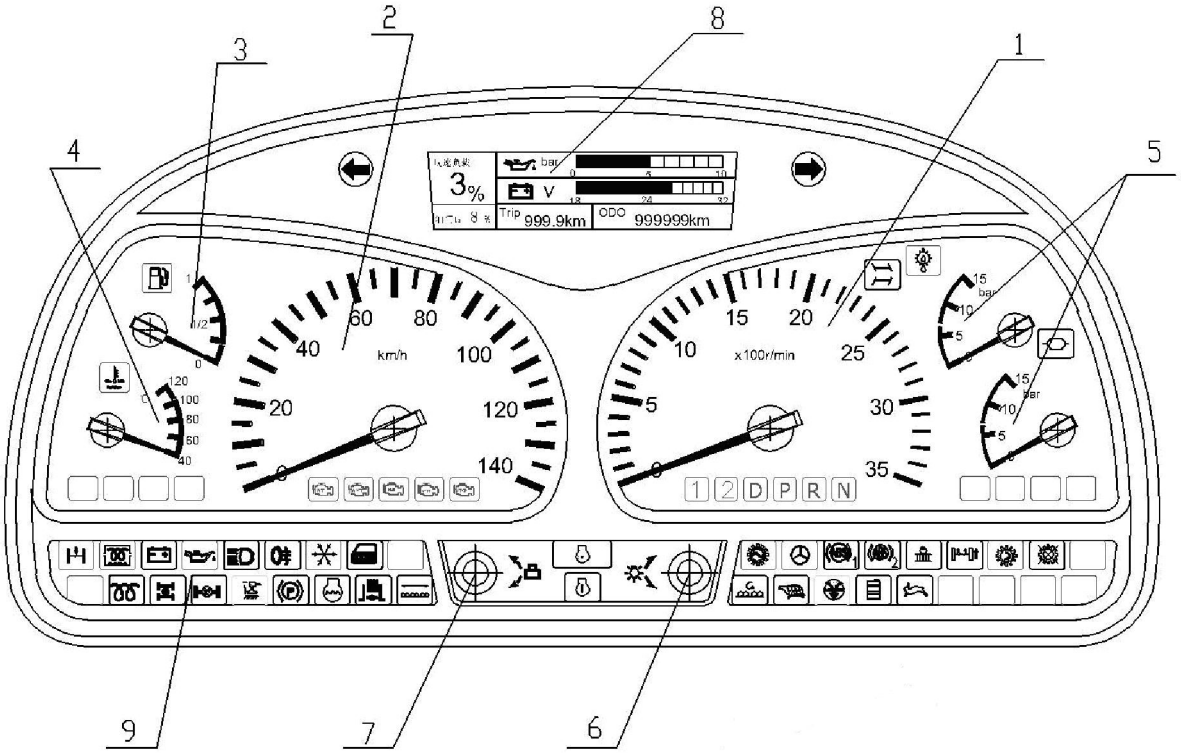

1. Tachograph
2. Odometer
3. Fuel gauge
4. Water thermometer
5. Barometer
6. Right rotary switch
7. Left rotary switch
8. LCD
9. Display unit

1. Tachograph

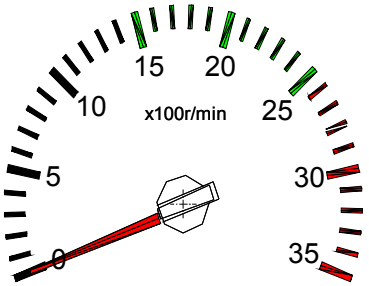

Tachograph displays engine speed (RPM) and its actual running time.

The pointer should be in the green region during vehicle driving. Do not let the pointer stay in the red region for a long time during engine running, which would result in engine damage.

2. Odometer

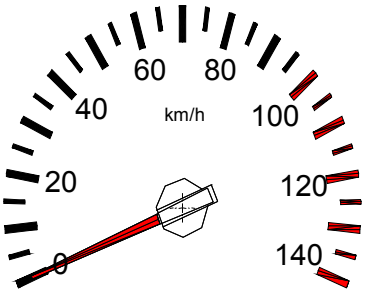

Odometer displays the vehicle speed whose unit is km/h. It is used to record the total driving distance which can be used as a reference for vehicle's maintenance intervals.

3. Fuel gauge

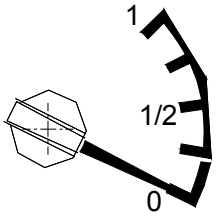

If the key is in ON, the fuel gauge will display the fuel reserves.

1 represents fuel reserve 100% and 0 represents fuel reserve 0%.

Caution:

Add clean fuel into the fuel reservoir when the pointer is near 0 to ensure normal driving.

4. Water thermometer

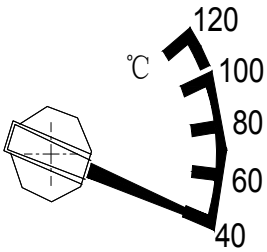

If the key is in ON, the water thermometer will display the coolant temperature of the engine. The pointer points to the white region in normal driving conditions and points to the red region when driving in high-temperature areas at high speed or climbing the ascending gradients.

5. Barometer

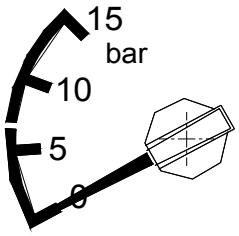

The two barometers resp. display the air pressure of main brake air reservoirs for front and intermediate / rear axles.

Caution:

If the air pressure is less than 0.55MPa, the warning light “Air pressure too low” will illuminate and the buzzer will sound. Risk of danger if start off at this time!

6. Right rotary switch

Switchover brightness adjustment / instrument display screens

Press: set to display screens of instruments

Turn: set to brightness adjustment

7. Left rotary switch

Switchover data setting / diagnosis

For details, refer to the state of LCD.

8. LCD and its diagnosis screens

Main screen

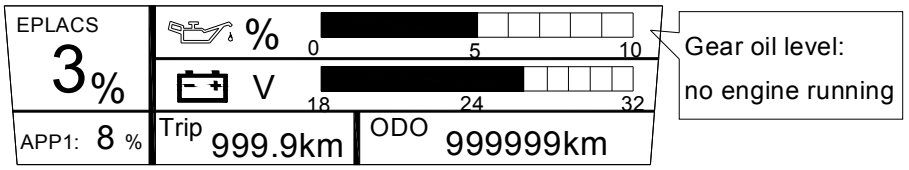

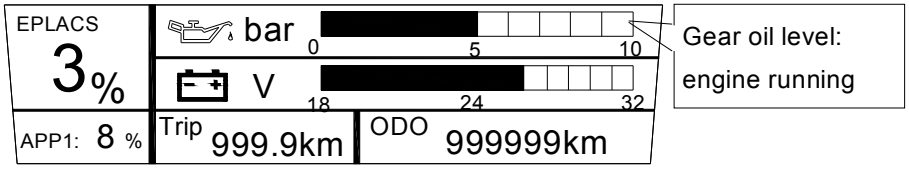

Press left rotary switch 7 continuously to clear up trip.

Auxiliary screen

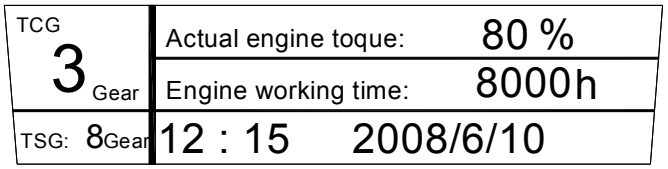

Time set: press left rotary 7 switch
Set hour (flash): turn left rotary switch
Set minute (flash): turn left rotary switch
Set time in this sequence:
Hour - Minute - Year - Month- Date
Wait 3 seconds to exit this mode

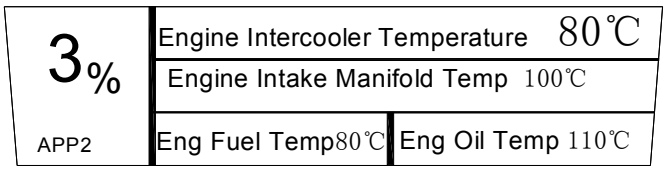

Press right rotary switch 6: changeover interfaces
Set sequence:
Main ---> Auxiliary --> Next auxiliary --> Diagnosis

If no button is pressed for 3 to 5 seconds, return to main interface.

Diagnosis screen

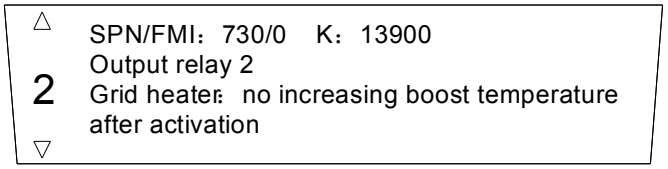

Turn left rotary switch: page down / up
When errors activated, last error information is displayed.

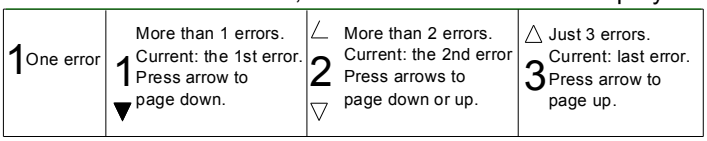

Turn left: page up
Turn right: page down
If no error activated, press right rotary switch.
Diagosis interface: "No error"

Press right rotary switch: changeover interfaces
Set sequence:
Main ---> Auxiliary --> Next auxiliary --> Diagnosis

If no button is pressed for 3 to 5 seconds, return to main interface.

Display screens of instruments:

Press right rotary switch 6 to set display screens.

Set sequence: Main screen → Auxiliary screen → Next auxiliary screen → Diagnosis screen

If no button is pressed for 3 to 5 seconds, return to main screen automatically.

A. Main screen

Display engine oil level, engine oil pressure, battery voltage, trip and total trip.

a. Engine oil level and battery voltage will be displayed if engine is not started.

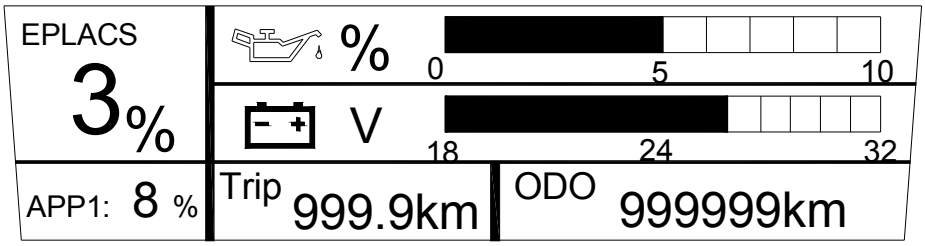

Note:

EPLACS: Engine Percent Load at Current Speed

APP1: Accelerator Pedal Position 1 (Chassis)

b. Engine oil pressure and engine voltage in working conditions will be displayed after engine is started.

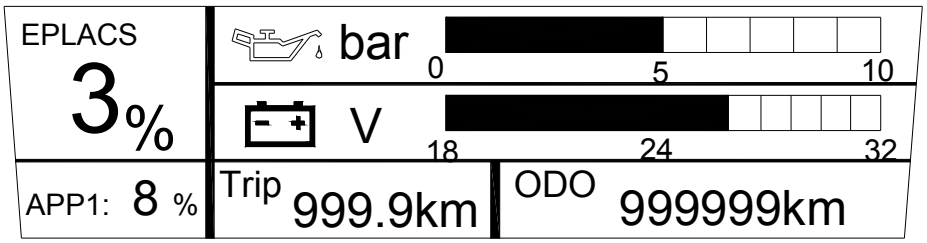

Press left rotary switch 7 to clear up trip.

B. Auxiliary screen

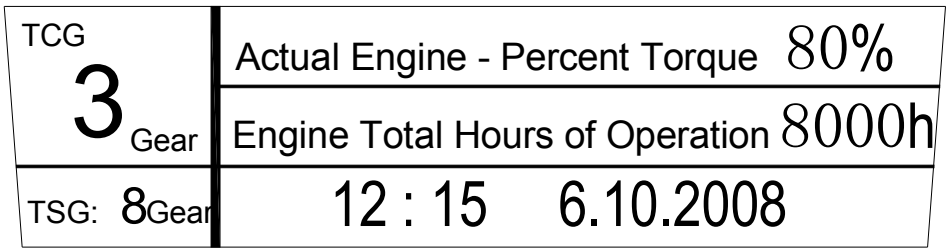

Display actual engine torque, engine total operating hours, the current gear, time and date etc.

If the transmission is manually controlled, nothing will be displayed in the TCG and TSG on the left part of the above illustration.

- Press switch 7 to set Hour.
  Turn left rotary switch to set Hour when Hour flashes.
- Press switch 7 again to set Minute.
  Turn left rotary switch to set Minute when Minute flashes.

Set sequence is as follows:

Hour → Minute → Year → Month → Date → Time

Wait 3 seconds to exit this mode.

Note:

TCG: Transmission Current Gear

TSG: Transmission Selected Gear

C. Next auxiliary screen

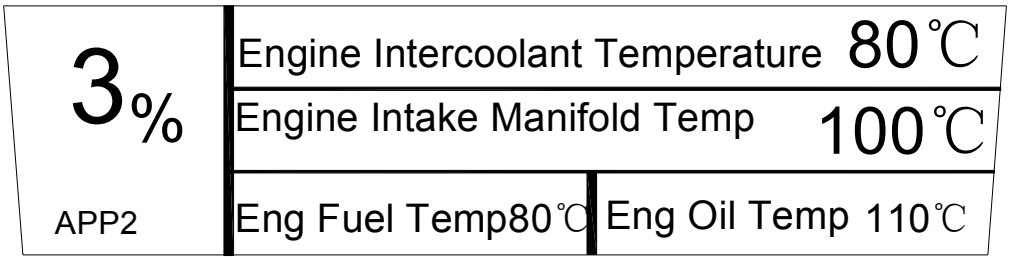

Display engine intercoolant temperature, intake manifold air temperature, fuel and engine oil temperature etc.

Note:

APP2: Accelerator Pedal Position 2 (Superstructure)

D. Diagnosis screen

▲
2
▼

SPN/FMI：730/0　K：13900
Output relay 2
Grid heater：no increasing boost temperature after activation

Turn switch 7 for page up / down.

When errors are activated, last error is displayed.

Turn left: page up

Turn right: page down

1 One error	1 ▼ More than 1 errors. Current: the 1st error. Press arrow to page down.	▲ 2 ▼ More than 2 errors. Current: the 2nd error Press arrows to page down or up.	▲ 3 Just 3 errors. Current: last error. Press arrow to page up.

If no error is activated, press switch 6 to set to diagnosis screen.

Diagnosis screen displays "No error".

9. Display unit

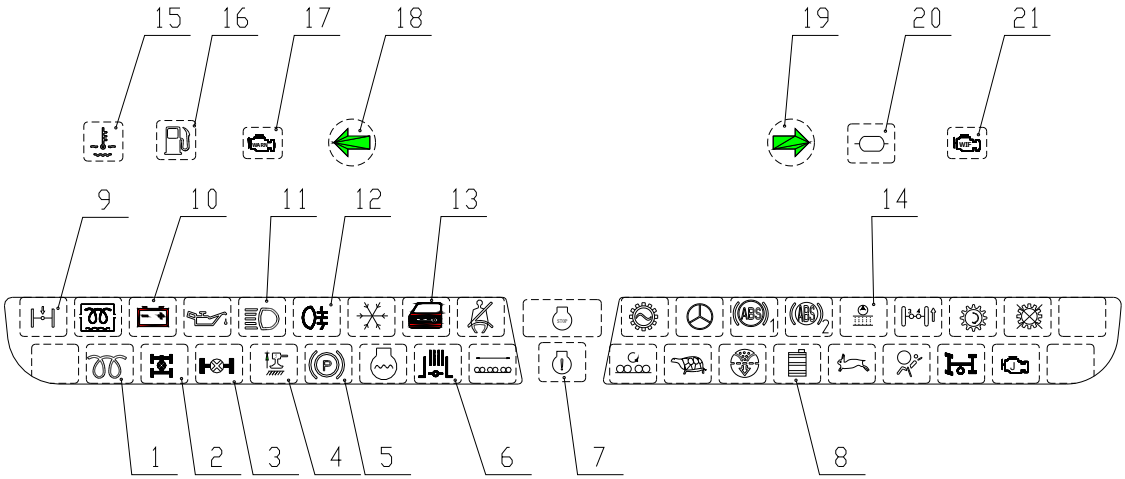

1. Control light	Diesel engine preheating system
2. Control light	Longitudinal differential lock
3. Control light	Transversal differential lock
4. Control light	The 5th outrigger retracting completely
5. Control light	Parking brake closed
6. Control light	Retarding brake active
7. Warning light	Engine defects
8. Warning light	Engine cooling water level too low
9. Control light	Set axle suspension to “Sprung”
10. Warning light	Charge monitoring
11. Control light	High beam
12. Control light	Rear fog light
13. Warning light	Door not closed well
14. Warning light	Filter soiled
15. Warning light	Engine cooling water temperature too high
16. Warning light	Fuel level too low
17. Warning light	Engine error code displayed
18. Control light	Vehicle direction of travel left
19. Control light	Vehicle direction of travel right
20. Warning light	Brake pressure too low
21. Warning light	Too much water in fuel

1) Control light Diesel engine preheating system

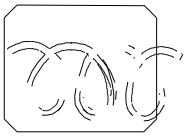

In winter (the engine coolant temperature below -4°C), preheat the engine before starting.

Turn the key to position ON.

Control light illuminates: preheat the engine.

Control light flashes for 3 times, start the engine.

After the engine is started, preheat the engine continuously (this control light does not light up).

Note:

If the engine is started when the control light is lighting or flashing, the preheating operation will be cut off immediately.

2) Control light Longitudinal differential lock

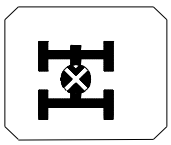

Control light illuminates: the longitudinal differential switch is on and the longitudinal differential is locked.

3) Control light Transversal differential lock

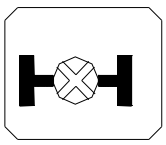

Control light illuminates: the transversal differential switch is on and the transversal differential is locked.

4) Control light The 5th outrigger retracting completely

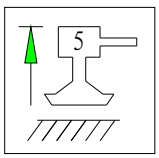

Control light illuminates: the 5th outrigger is retracted completely

Other outriggers can be retracted only after the 5th outrigger is retracted completely.

5) Control light Parking brake closed

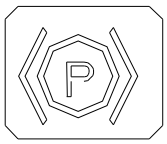

Control light illuminates: parking brake is activated.

Do not start the vehicle until the parking brake is released and the control light extinguishes.

6) Control light Retarding brake active

Control light illuminates: Engine compression brake and exhaust brake are activated.

7) Warning light Engine defects

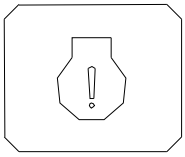

Warning light illuminates: engine defects.

Rectify it.

8) Warning light Engine cooling water level too low

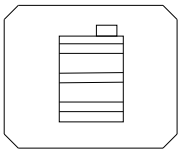

Warning light illuminates: engine cooling water level is too low. Add cooling water in time.

9) Control light Set axle suspension to “Sprung”

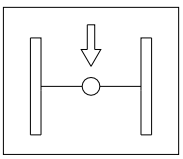

The control light lights up: suspension for axles 1 and 2 are set to “Sprung”.

10) Warning light Charge monitoring

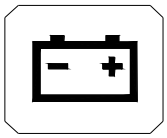

Warning light illuminates: key in position ON.

This warning light will extinguish after the engine is started. It indicates the engine begins to charge the battery.

Caution:

If the warning light does not extinguish during battery charging, it is generator or charging system fault. Stop to check at once!

11) Control light High beam

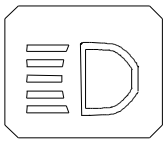

Control light illuminates: high beam or headlamp flasher is in use.

12) Control light Rear fog light

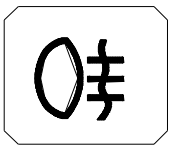

Control light illuminates: rear fog light is in use.

13) Warning light Door not closed well

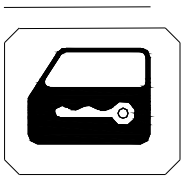

Warning light illuminates: the door is not closed well.

Caution:

Do not drive the vehicle when the warning light lights up.

14) Warning light Filter soiled

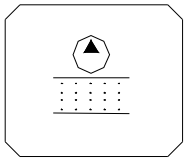

Warning light illuminates: the filter in chassis hydraulic system is soiled.

Clean or replace the filter.

15) Warning light Engine cooling water temperature too high

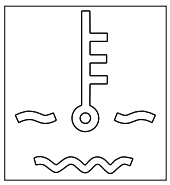

Warning light illuminates: the engine cooling water temperature is too high.

16) Warning light Fuel level too low

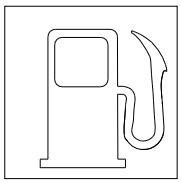

Warning light illuminates: the fuel reserve in the tank is too low. Add clean fuel in time.

17. Warning light Engine error code displayed

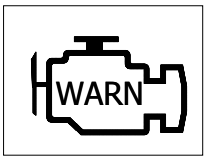

The warning light flashes to display the error code.

18) Control light Vehicle direction of travel left

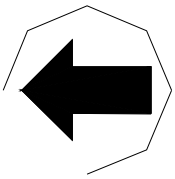

Control light illuminates: vehicle travels left.

19) Control light Vehicle direction of travel right

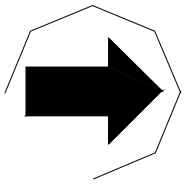

Control light illuminates: vehicle travels right.

20) Warning light Brake pressure too low

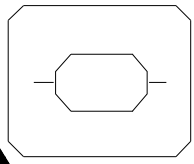

Warning light illuminates: brake pressure too low. Do not drive the vehicle.

Warning light extinguishes: brake pressure increased to the specified value.

Caution:

Do not drive the vehicle if the warning light lights up!

21) Warning light Too much water in fuel

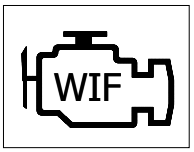

This warning light lights up: too much water in fuel

3.1.3 Foot pedal: Engine control

The engine control is an electron accelerator. Apply it to accelerate or release it to decelerate the vehicle.

3.1.4 Foot pedal: Service brake

Apply the service brake to decelerate and stop the vehicle.

3.1.5 Foot pedal: Clutch

Depress the clutch pedal to disengage the clutch.

3.1.6 Keyboard

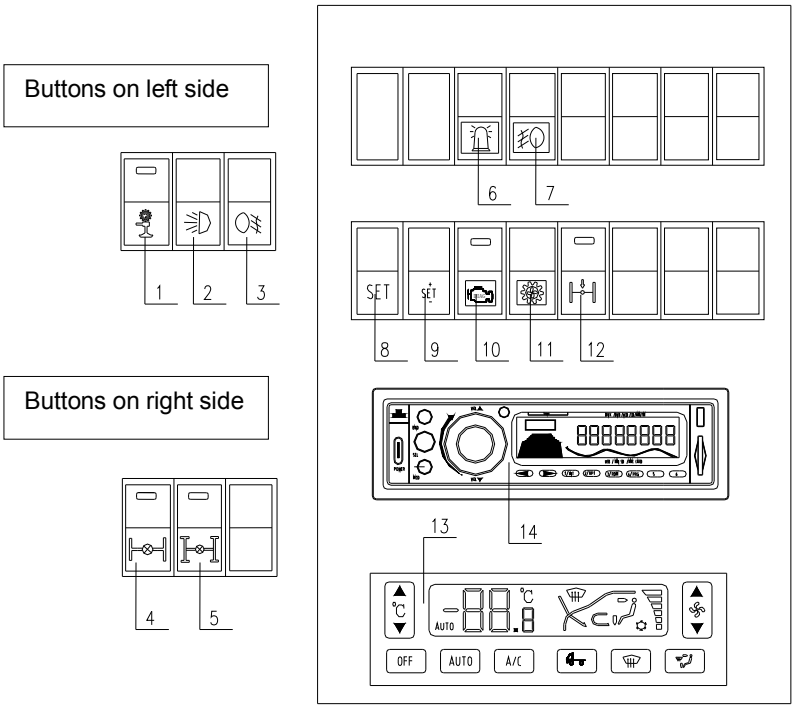

1. Button	Outrigger power source
2. Button	Outrigger illumination
3. Button	Rear fog light
4. Button	Transversal differential lock
5. Button	Longitudinal differential lock
6. Button	Rotating beacons
7. Button	Front fog light
8. Button	Tempomat
9. Button	Temposet
10. Button	Engine fault diagnosis
11. Button	Radiator-fan of transfer case opened
12. 2-handed button	Locking the axle suspension
13. Switches	Air conditioning system
14. DVD player	

1. Button Outrigger power source

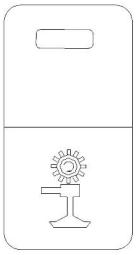

The button with a lock on its upper part can only be activated when the lock is moved downwards.

Activate it to switch on outrigger power source.

2. Button Outrigger illumination

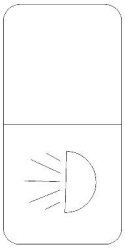

Activate it to switch on outrigger illumination.

3. Button Rear fog light

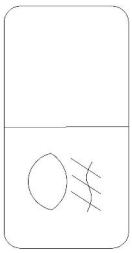

Activate it when driving in foggy days.

4. Button Transversal differential lock

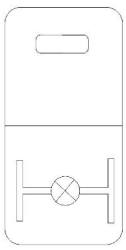

Activate it in off-road driving condition to prevent wheels from skidding.

Deactivate to release this function.

Caution:

Only activate this button when vehicle skids. Once it drives on road, press the button to release the transversal differential lock to avoid axle damage.

5. Button Longitudinal differential lock

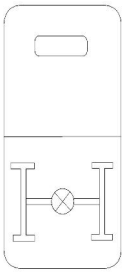

Activate it in off-road driving condition to prevent front / rear wheels from skidding.

Deactivate to release this function.

Caution:

Only activate this button when vehicle skids. Once it drives on road, deactivate the button to release the longitudinal differential lock to avoid axle damage.

6. Button Rotating beacons

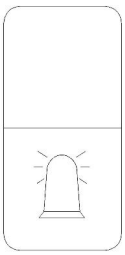

Activate the button to light up the rotating beacons.

7. Button Front fog light

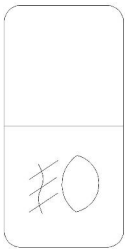

Activate it when driving in foggy days.

8. Button Tempomat

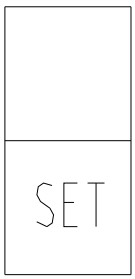

Press the switch forwards to exit Tempomat.

Press it backwards to enter Temposet.

Tempomat refers to driving the vehicle at a constant speed set by ECU without applying engine control. It is usually used in long-distance driving to relieve the driver's fatigue.

9. Button Temposet

Press the switch forwards or backwards to enter Temposet.

The switch can also control the driving speed.

Note:

a. When the Temposet is activated (press +/- to activate the switch)

The lowest gear: 4

Engine RPM: 700rpm-2500rpm

Tip up/ down: the speed is increased / decreased by 2km/h

Accelerating / decelerating: 1.5km/h/s

The minimum starting speed: 25km/h

The maximum starting speed: 100km/h

Driving speed: 20km/h-120km/h

b. Caution:

When the Temposet is activated, the driving speed will not be controlled by the engine control. At this time, carrying out the following operations can reliably deactivate the Temposet:

1) Apply the service brake

2) Press button 8

3) Depress the clutch pedal

4) Activate the exhaust brake switch

The following defects will make the Temposet be invalid:

5) Button 9 defects

6) Brake switch defects

7) Engine control defects

8) Clutch switch defects

9) Engine RPM monitor defects

10) Vehicle speed sensor defects

11) Supercharging pressure sensor defects

12) Rail pressure sensor defects

c. How to activate the Temposet during driving:

1) Energize

The Temposet can be activated (NEUTR);

2) Activate Temposet and change the current Temposet speed

When the gear, driving speed and engine RPM comply with the requirements for Temposet, press the (set+) or (set-) to activate the Temposet button and hold the Temposet. At this time, change the Temposet speed in the following steps:

Accelerating **(acc):** Press the (set+) on Temposet button and hold, the engine RPM is continuously increased and the driving speed is increased accordingly;

Decelerating **(dec)**: Press the (set-) on Temposet button and hold, the engine RPM is continuously decreased and the driving speed is decreased accordingly;

Tip up: Press the (set+) on Temposet button, the vehicle specific speed is increased by 2km/h and the driving speed is increased accordingly;

Tip down: Press the (set-) on Temposet button, the vehicle specific speed is decreased by

2km/h and the driving speed is decreased accordingly;

3) Turn the Temposet off

Press the Tempomat button (SET) forwards to turn off the Temposet completely. Under this condition, the Temposet cannot be resumed by pressing the Tempomat button (SET) backwards. Press the Temposet button and the (set+) or (set-) to start the new Temposet.

The Temposet can also be turned off by applying the clutch, brake or exhaust brake under the condition that the corresponding switches are engaged to the ECU.

The Temposet can also be turned off by applying the engine control. Under Temposet condition, if accelerator signal is detected, ECU will make comparison between Temposet torque and pedal torque. The larger one will be used for the overtaking during Temposet. The Temposet speed will be resumed automatically after releasing the engine control.

d. Other notes

(1) Only use the Temposet when traffic conditions permit a steady speed. It may not be possible to maintain the speed on ascending or descending gradients. Otherwise the Temposet will be locked because of too large acceleration or deceleration. As a result, the Temposet will be resumed by resetting the ECU.

(2) The requirements for Temposet are rigorous. If the Temposet button cannot be activated, firstly check the button itself for normal work.

For example:

If the clutch switch is damaged, the clutch signal sent to ECU is 1. It means that the clutch pedal has been depressed. At this time, the Temposet button cannot be activated for safety.

So does the other switches.

(3) Do not keep pressing the Temposet button for a long time. If the button is pressed for more than 30s, the warning light will always light up and display the error code “341”.

Note: Ensure the button is reset after operation.

e. Test the function of Temposet / PTO

(1) Drive the crane to a flat road and make the crane under good condition.

(2) In order to test the Temposet button, the PTO should be tested when starting the engine.

a. Switch on the engine;

b. Press the (RES) button to make the engine RPM increased to 1300rpm;

c. Press (set+) or (set-), the engine RPM will be increased or decreased accordingly;

d. Press the OFF button or depress the service brake pedal, the engine will run at idle speed.

The PTO can help the manufacturer to check the Temposet button mainly.

When the PTO is engaged, the clutch, exhaust brake and engine control are invalid.

10. Button Engine fault diagnosis

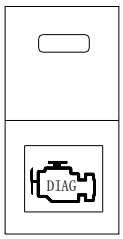

Press the button and release, the warning light “Engine defects” will display the flash code.

Caution:

If the switch is activated all the time, the warning light “Engine defects” illuminates accordingly.

11. Button Radiator-fan of transfer case opened

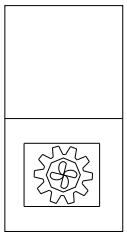

Activate it to switch on radiator-fan of transfer case.

Caution:

A temperature control switch is mounted on the transfer case. When oil temperature of transfer case exceeds 85℃, the radiator-fan will start to work automatically.

12. 2-handed button Locking the axle suspension

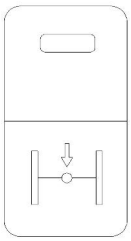

When the switch is not activated, suspension for axles 1 and 2 are locked. At this time, the rod-end chamber of the suspension cylinder is disengaged with the energy accumulator, but the cylinder will not fall down with outriggers extended.

Activate the switch, the axle suspension is released and is set to “Sprung”. At this time, the rod-end chamber of suspension cylinder and the energy accumulator are connected.

Danger:

Activate the button when the vehicle stops. Set the axle suspension to “Sprung” in normal driving conditions. Activate the button to lock the axle suspension after driving or before operating the outriggers; otherwise the outrigger control box cannot be energized.

13. Switches Air conditioning system

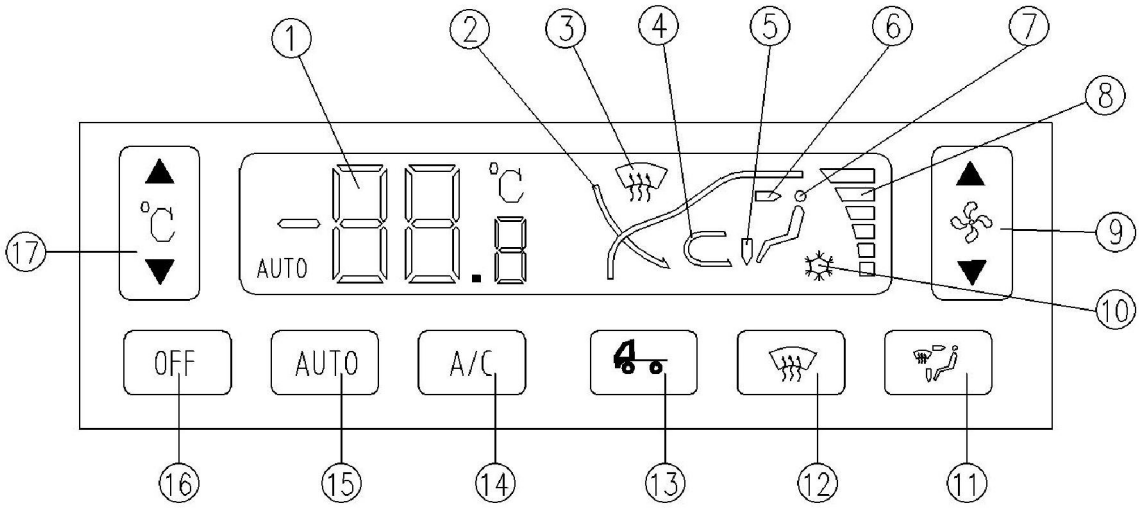

①. Temperature

Interior temperature range: -30.0℃ to 80.0℃

If the interior temperature sensor is defective, 25.0℃ will be displayed and never changed.

②. Outer air circulation

③. Defrosting air supply

④. Interior air circulation

⑤. Footwell air supply

⑥. Front window air supply

⑦. Front window air supply

⑧. Fan speed bar chart:

1 bar – 1 stage, 2 bars – 2 stages, 3 bars – 3 stages,

4 bars – 4 stages, 5 bars – 5 stages, 6 bars – 6 stages

⑨. Fan speed button

Arrow up – fan speed (blower), faster

Arrow down – fan speed (blower), slower

If the fan speed button is not activated, arrows up / down are invalid.

If the fan speed button is activated, press arrows up / down to increase / decrease the fan speed.

If the fan speed has been increased / decreased to the highest / lowest degree, arrows up / down will be invalid.

⑩. Refrigeration

⑪. Mode button

Changeover front window air supply / footwell air supply/ footwell and defrosting air supply

⑫. Defrosting air supply button

Activate this button: enter into defrosting mode

⑬. Circulation button

Changeover interior / outer air circulation

⑭. A/C button

Control light illuminates: compressor activated

Control light extinguishes: compressor deactivated

⑮. AUTO button

Press AUTO: auto running mode is activated.

Press AUTO twice, or press A/C, Defrosting air supply: exit auto running mode.

Interior air circulation is the default auto running mode which can be adjusted manually.

⑯. OFF button

Press this button to turn off air conditioning system.

Press any button (except OFF) to activate air conditioning system.

⑰. Temperature adjustment button

Temperature range: 17℃ to 29℃.

Press this button and the temperature is increased or decreased by 1℃ between 17℃ and 29℃.

Press this button and hold, the temperature will be continuously increased or decreased.

The set temperature will flash and the interior temperature will appear on the display after 5 seconds.

LO: set temperature below 17℃

HI: set temperature above 29℃

The air conditioning system is of diagnosis function.

● Press and hold OFF.

● The error codes will appear on the display after 10 seconds.

C0: Normal

C3: The interior temperature sensor uninstalled or defects

C5: The evaporator temperature sensor uninstalled or defects

C6: Water valve steering gear uninstalled or defects

C7: Air door for mode adjustment uninstalled or defects

Warning:

Never use the heater during driving if engine coolant temperature is below 70℃.

Caution:

a. Do not use air conditioning when the engine is stopped or is running at idle speed; otherwise, it will cause excessive battery consumption and thus affect normal driving.

b. If the vehicle continuously drives at low speed, please downshift 1 gear to increase the engine RPM. If start the vehicle suddenly or climb long ascending gradients, please

switch off air conditioning to prevent the engine from overheating.

c. In winter or other periods without using air conditioning, run the air conditioning for several minutes once a month to benefit the lubricating circulation and ensure the system in good state.

d. Check refrigerant regularly. If there is no or not enough refrigerant, add it timely.

e. If there are abnormal vibration, noise or smell during operation, stop and examine the machine immediately. Never run with faults.

f. Clean the surface of condenser regularly. Do not clean it with steam. Clean it with compressed air or cold water.

g. Never dismantle the belt or pipeline of compressor after using the air conditioning.

h. In summer, close the shutoff gate valve on the hot-water pipe of heater at the bottom of driver's cab; otherwise refrigeration effect may be affected. In winter, open the shutoff gate valve to make hot water enter into the heater. For hot water type heater, engine coolant temperature will affect the interior temperature. If the engine coolant temperature cannot be heated, the driver's cab will not be warmed.

14. DVD player

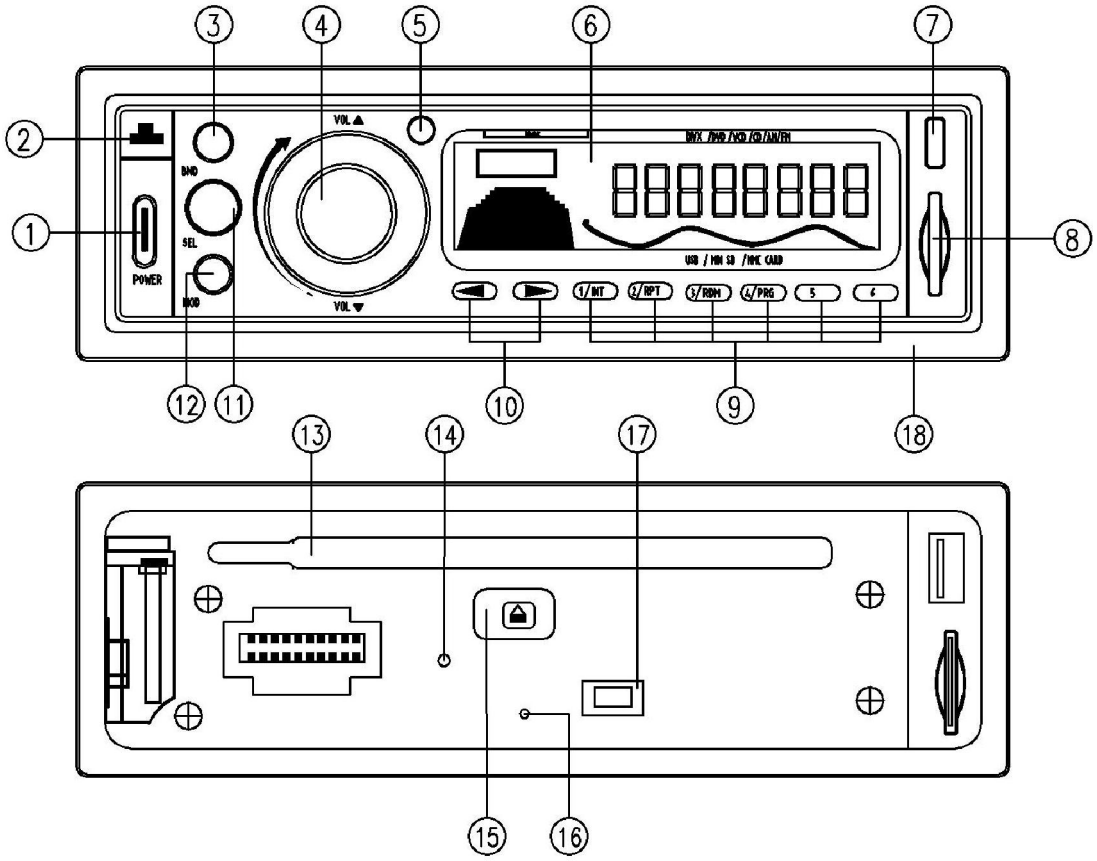

①. Button	Power
②. Button	Open control panel
③. Button	Changeover play \ pause \ band
④. Rotary switch	Volume set
⑤. IR sensor	
⑥. LCD	
⑦. USB port	
⑧. MINISD port	
⑨. Alphanumeric keypad	
⑩. Buttons	Band \ Skip previous \ Skip next \ fast-forward \ fast-backward
⑪. Function key	
⑫. Button	Mode select
⑬. Disc tray	
⑭. Button	Reset
⑮. Button	Open / Close the disc tray
⑯. Control light	LED
⑰. Induction switch	
⑱. Control panel	

Switch off ① and press ② to insert DVD.

Press ⑮ to take DVD out.

The control panel can be installed and removed.

How to remove:

● Press ① and ②;

● Slide the panel leftward and pull it out toward the operator from right side.

How to install:

● Slide the panel from left side;

● Secure it.

Caution:

Do not touch the connector with hand, which will result poor contact. If the connector is polluted, clean it with soft cloth.

Dismantle the control panel as few as possible to reduce the chance of touching the connector.

Caution:

Turn the ignition key switch to "ACC" when using DVD player without engine running.

3.1.7 Center console

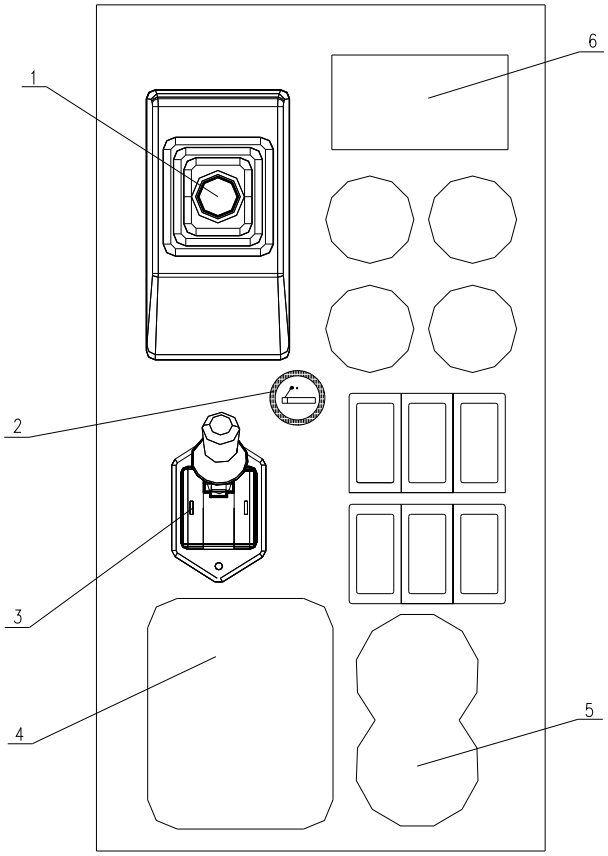

1. Range selector
2. Cigarette lighter
3. Parking brake
4. Storage compartment
5. Cup holder
6. Ashtray

1. Range selector

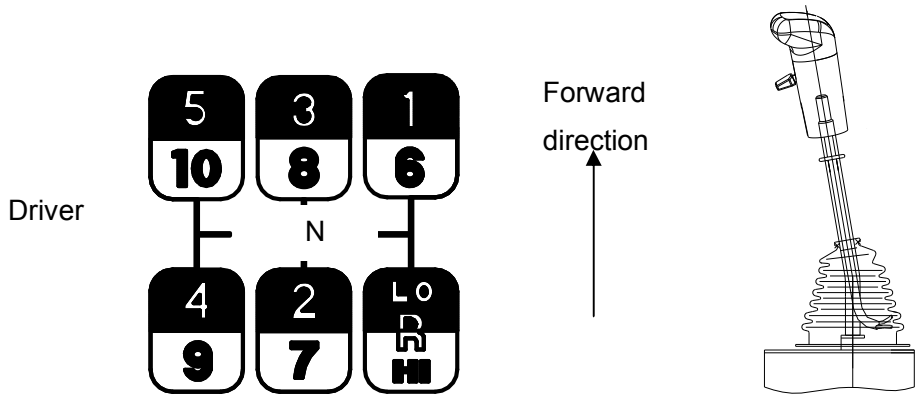

The range selector is installed on the right-hand side of the driver.

The transmission consists of a main transmission and an auxiliary transmission. The main transmission is manually and mechanically controlled, and the auxiliary one is pneumatically controlled.

The shifting pressure cannot be less than 0.41-0.44MPa.

By applying double flexible shafts (single-H type) control mode, high and low gear can be changed over on the range selector. Jog the selector leftwards, rightwards, forwards and backwards to select and changeover the gear.

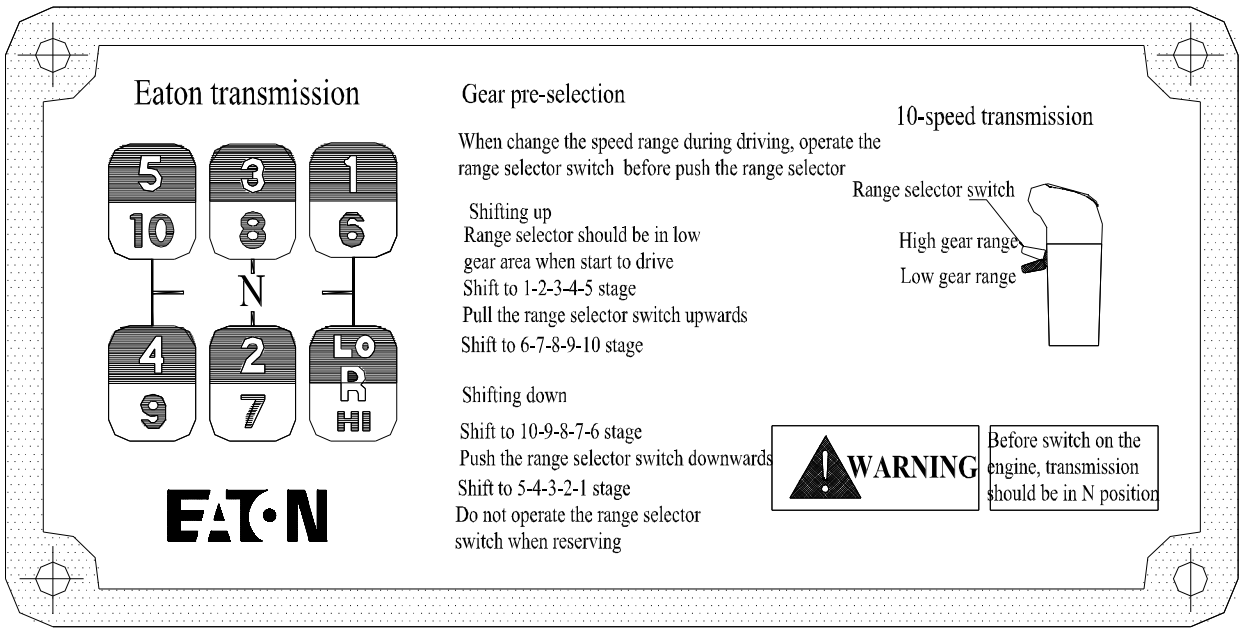

2. Cigarette lighter

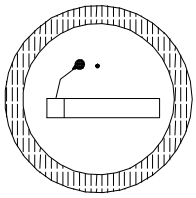

Press the cigarette lighter for 3 to 5 sec. Pull it out to light cigarette. After using it, return it back.

Caution:

If using the cigarette lighter without engine running, turn the ignition key to ACC.

3. Parking brake

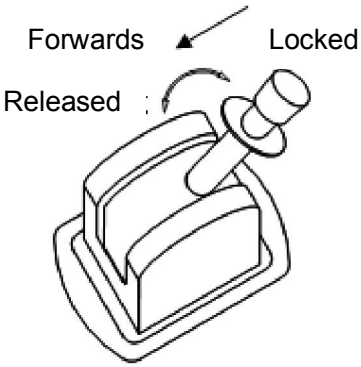

Pull the parking brake backwards to lock the vehicle. Push the handle forwards to release vehicle locking.

Caution:

Do not start the vehicle unless the parking brake is released and the control light “Parking brake closed” extinguishes.

4. Storage compartment
5. Cup holder
6. Ashtray

3.1.8 Crane lighting

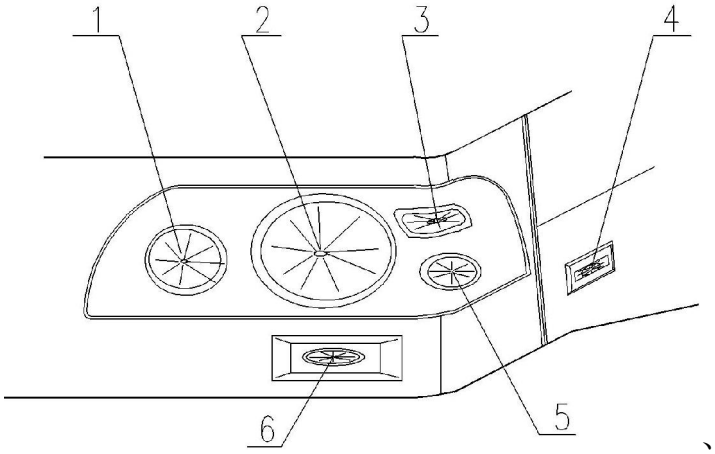

Take the lights on the left as an example. The right lights are the same as the left ones. For details, refer to the Chapter 3.2.1.

1. Front high beam
2. Front low beam
3. Front turn signal
4. Side turn signal
5. Front position lamp
6. Front fog lamp

3.1.9 DVD reversing system

The display of DVD reversing system is installed at the middle top position above the front panel of driver's cab.

As for detailed information, please refer to the operating instructions supplied with the crane.

Caution:

Switch the ignition starter switch to position "ACC" if using DVD reversing system without engine running.

3.1.10 Door – driver's cab

Open the door from outside:

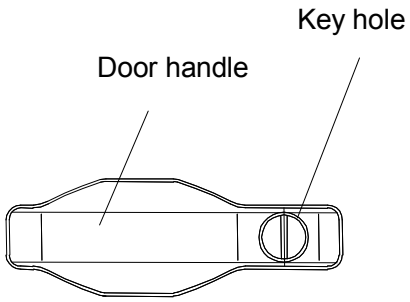

Hold the handle and pull it outwards.

Close the door:

The door will be locked automatically when the door is closed.

Caution:

Ensure the door is closed well before driving.

Open the door from inside:

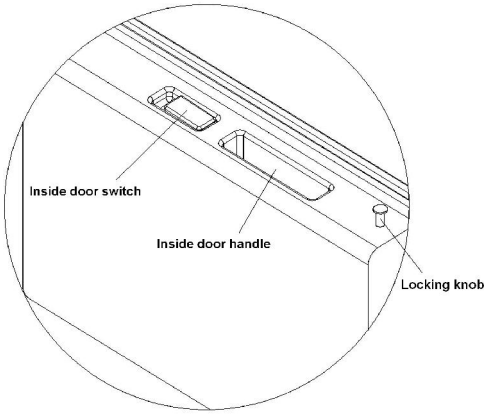

Pull the inside door switch upwards and hold the handle to push the door outwards.

Lock the door from inside:

The locking knob is near the door window glass.

Press the locking knob to lock the door from inside. Pull the locking knob upwards before opening the door.

Caution:

If the door is not closed well, the locking knob cannot be pressed down.

Lock the door from outside:

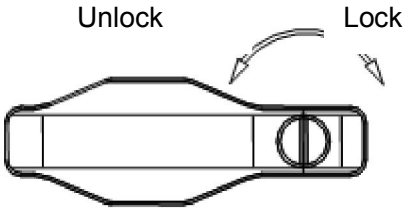

Insert vehicle key into the key hole. Switch it clockwise to close the door.

Caution:

Ensure the locking knob is lowered. Switch the key anticlockwise to unlock the door.

3.1.11 Seats in driver's cab

3.1.11.1 Driver's seat

The driver’s seat with single armrest has pneumatic suspension and can be adjusted to suit any driver height or size. Adjust driver's seat before setting off.

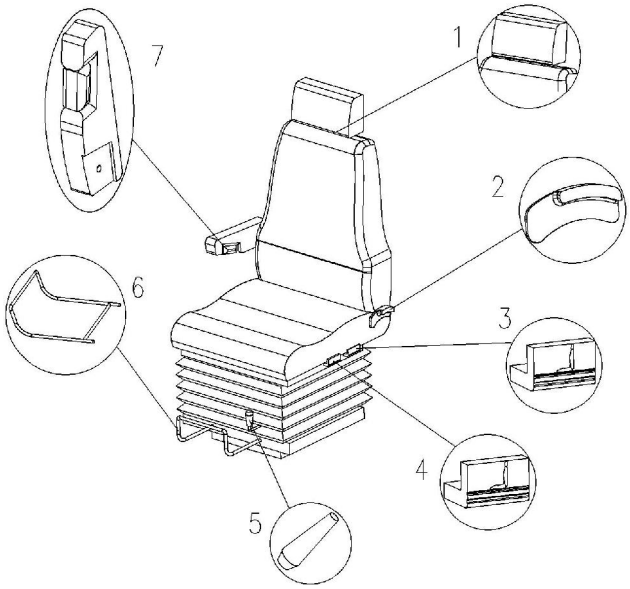

1. Switch, adjust headrest setting
2. Handle, adjust backrest setting
3. Handle, adjust seat cushion angle (rear section)
4. Handle, adjust seat cushion angle (front section)
5. Handle, adjust damper
6. Lever, adjust horizontal setting
7. Rotary switch

1. Switch, adjust headrest setting

   Press this switch to move the headrest upwards or downwards. Release the switch to lock the headrest.

2. Handle, adjust backrest setting

   Pull the handle forwards. Release it until the backrest stops to a suitable angle.

3. Handle, adjust seat cushion angle (rear section)

   Pull the handle upwards. Release it until the cushion (rear section) stops at a suitable angle.

Caution:

Shake the seat after seat cushion adjustment to ensure the seat is locked.

4. Handle, adjust seat cushion angle (front section)

   Pull the handle upwards. Release it until the cushion (front section) stops at a suitable angle.

Caution:

Shake the seat after seat cushion adjustment to ensure the seat is locked.

5. Handle, adjust damper

   Rotate the handle anticlockwise to lock the damper for air bag. Rotate it clockwise to unlock and activate the damper.

6. Lever, adjust horizontal setting

   Pull the lever upwards. Release it until the cushion stops to a suitable position.

7. Rotary switch

   Turn the switch clockwise to raise the armrest and anticlockwise to lower the armrest.

3.1.11.2 Co-driver's seat

The co-driver’s seat is equipped with double armrests. The stiffness of the suspension is adjusted mechanically.

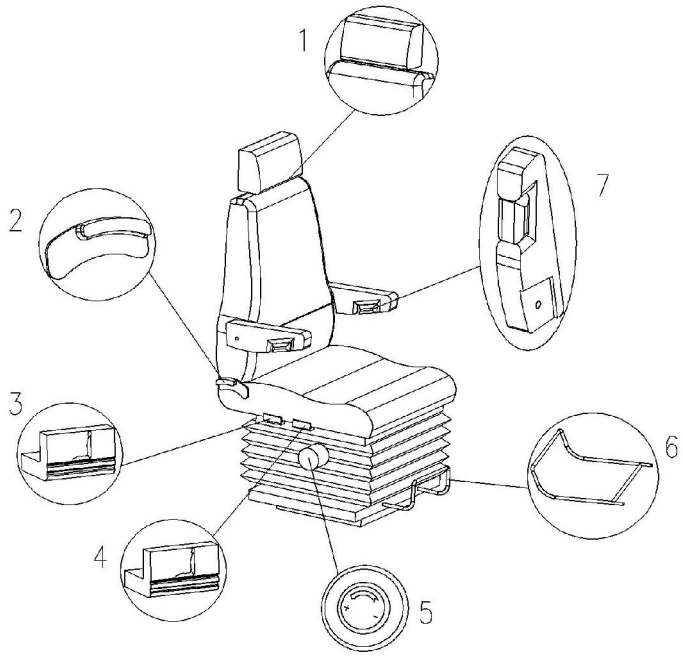

1. Switch, adjust headrest setting
2. Handle, adjust backrest setting
3. Handle, adjust seat cushion angle (rear section)
4. Handle, adjust seat cushion angle (front section)
5. Rotary switch, adjust stiffness of the suspension
6. Lever, adjust horizontal setting
7. Rotary switch

1. Switch, adjust headrest setting

   How to use this switch refers to above instructions of driver's seat.

2. Handle, adjust backrest setting

   How to use this handle refers to above instructions of driver's seat.

3. Handle, adjust seat cushion angle (rear section)

   How to use this handle refers to above instructions of driver's seat.

4. Handle, adjust seat cushion angle (front section)

   How to use this handle refers to above instructions of driver's seat.

Caution:

For handles 3 and 4, shake the seat after seat adjustment to ensure the seat is locked.

5. Rotary switch, adjust stiffness of the suspension

   Turn the switch clockwise or anticlockwise to adjust the seat cushion depth according to co-driver’s actual conditions.

Caution:

Do not turn the switch below the range of 40kg or above the range of 130kg.

6. Lever, adjust horizontal setting

   How to use this lever refers to above instructions of driver's seat.

7. Rotary switch

   How to use this switch refers to above instructions of driver's seat.

3.1.11.3 Passenger's seat

The passenger’s seat is equipped with double armrests and seat belt.

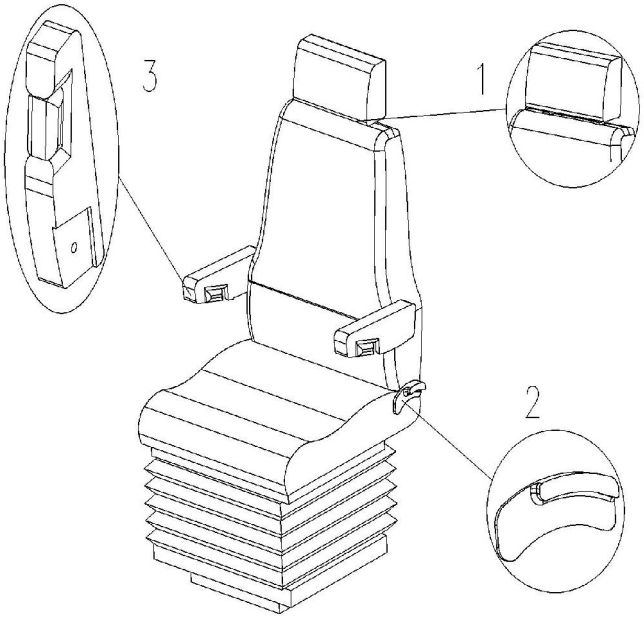

1. Switch, adjust headrest setting
2. Handle, adjust backrest setting
3. Rotary switch

How to use above switches refers to above instructions of driver's seat or co-driver’s.

Putting on seat belt:

Risk of fatal injury if seat belt is not worn!

All occupants must be belted in before setting off in the crane and during the drive.

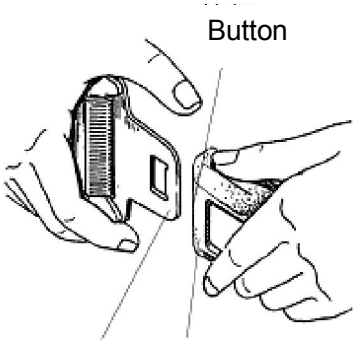

Insert tongue piece into belt lacer to fasten the belt.

Press the button to unfasten the belt.

3.1.12 Toolbox

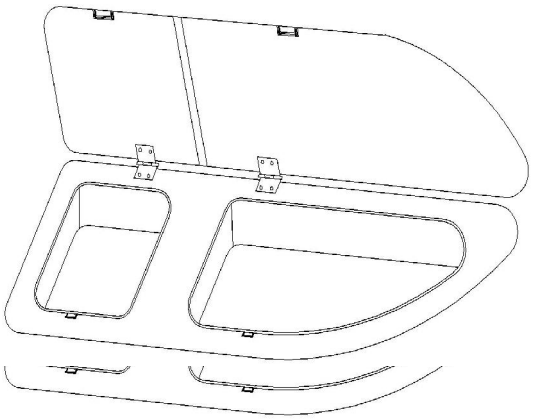

The toolbox is in the operating panel of the driver's cab, in which there are two tool boxes. One is big and another is small.

Press the cover downwards to open the toolbox.

Press the cover again to close it.

3.2 Before starting up the vehicle

3.2.1 General checks before setting off

1. Checking oil level
   a. Check oil level in the vehicle engine.
   b. Check oil level in transmission, transfer case and axles.
   c. Check oil level in chassis hydraulic reservoir.
2. Checking the fuel reserve

   Check fuel reserve at fuel gauge in driver cab.

Caution:

Do not run the fuel tank empty!

If the fuel tank has been run empty, always deaerate the entire fuel system.

3. Checking the coolant level

   Fill coolant equalizing reservoir up to overflow on filler neck.

Danger:

Risk of injury due to scalding of the skin!

Engine must be cold when performing coolant level check.

4. Checking the tires
   a. Check working conditions of the tires.
   b. Check air pressure and inflate tires to 0.75MPa (single tire) / 0.85MPa (double tires).

Caution:

Do not exceed the maximum air pressure during inflation.

5. Checking the mounting connections
   a. Check the following parts, such as bolts in steering and drive systems, retaining bolts of axial pin in suspension cylinder and wheel bolts, for proper seating.
   b. Check the parts in steering and brake systems for flexibility, safety and reliability. Especially check the following parts, such as the fittings of steering tie rods, ball heads of steering booster cylinders, retaining bolts of steering wheels, brake air chambers of axles and pipes, for tightness.
6. Checking the door locks, doors, windows and operating mechanisms for damage and outside mirrors for proper position.
7. Checking electrical system
   a. Check battery terminal post for reliability and check whether electrolyte level adheres to specified requirements.
   b. Switch the ignition starter switch to position ON, and check the instruments, switches, lighting, signals and wipers for function.

8. Checking pipes

Check the fittings of oil pipes, air pipes and water pipes for leakage and check whether water is visible in air reservoir.

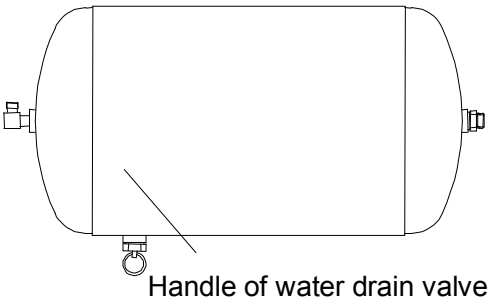

Caution:

a. Prop up or withdraw the handle of water drain valve to drain out the water.

b. Do not start up the vehicle until the drain valve is closed after the water is drained out.

9. Checking the control light of air filter. If the control light is red, clean or replace the filter.

Caution:

Clean the dust on the dust collector at the bottom of air filter regularly.

10. Checking the crane general transport condition

To be in a suitable condition for transportation, all loose parts on the mobile crane must be fastened and secured.

a. Set the axle suspension / axle locking system to "Sprung" suspension level for road driving.

b. Point crane superstructure in direction of driving and mechanically lock to prevent from twisting.

c. Fully telescope in the telescopic boom and set it down on the boom support.

d. Close windows and door of crane operator's cab.

e. Individually secure the sliding beams using pins to prevent them from unintentionally extending.

f. Secure all locks on tool boxes and engine hood.

11. Checking the lighting

Ensure that the ignition starter switch is switched on.

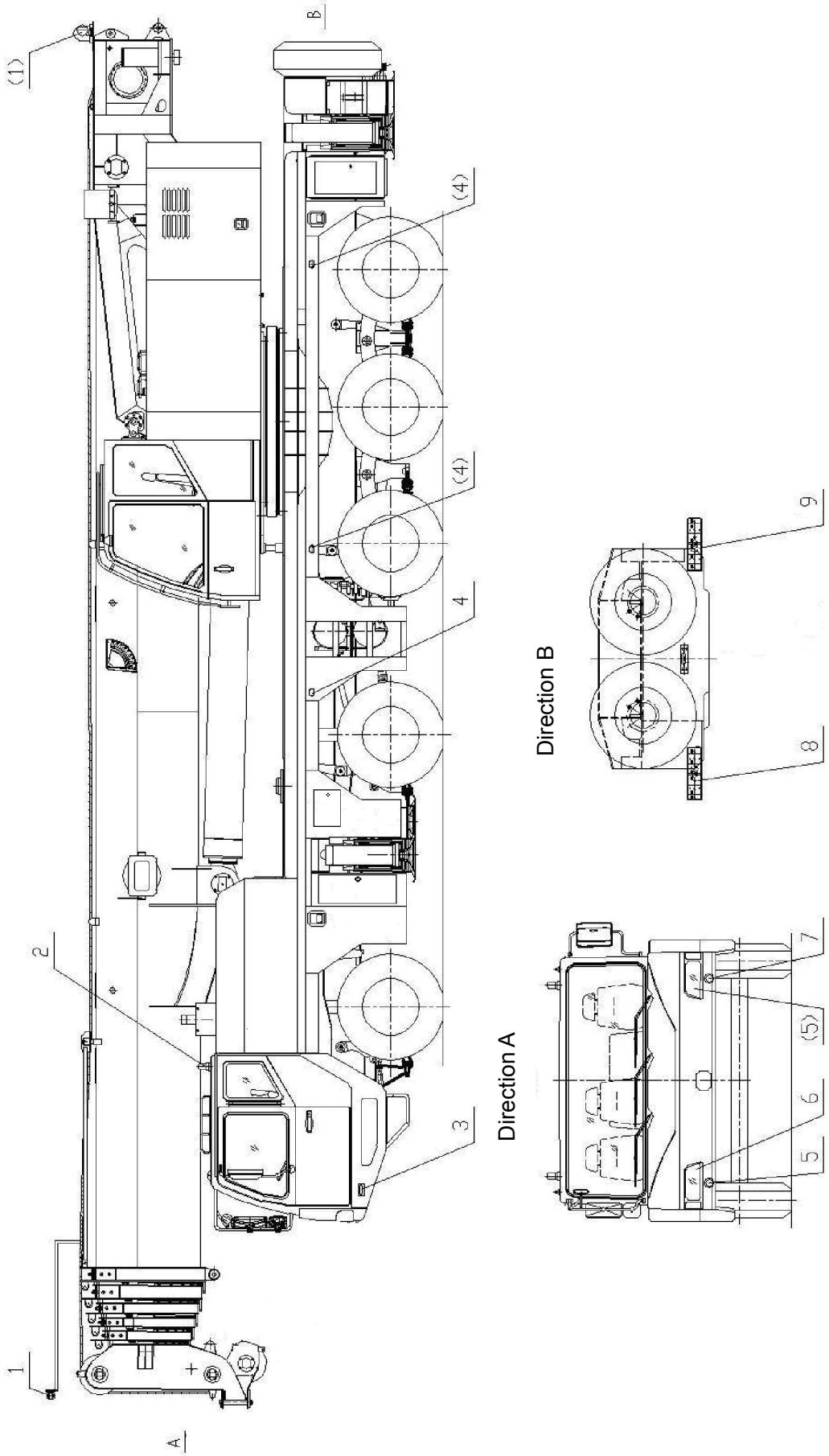
(1)
B
(4)
(4)
4
9
Direction B
8
2
7
(5)
6
5
Direction A
3
1
A

Checking the lighting before setting off (See above Illustration):

1) Corner marker lights

2) Rotating beacons

3) Side turn signals

4) Side marking lights and reflectors

5) Front fog lamps

6) Front low beam

7) Front high beam

High / low beam is used to light up the road and the lighting color is white. Low beam is anti-dazzle.

8) Front turn signals

9) Combination signals

Left rear combination signals (on left rear part of chassis frame):

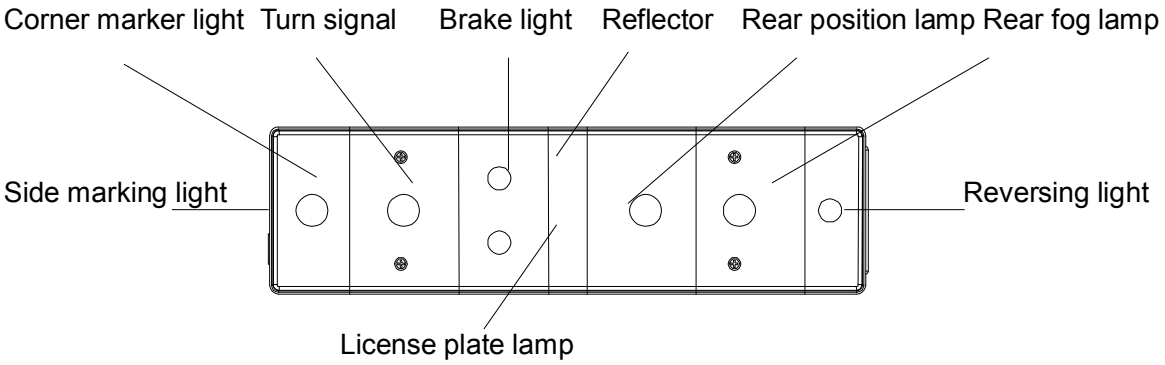

Left rear combination signals are combined in a rectangle plate.

The lighting color of the signals:

Corner marker light: red

Turn signal: amber

Brake light: red

Rear position lamp: red

Rear fog lamp: red

Reversing light: white

Side marking light: amber

License plate lamp: white

Right rear combination signals (on right rear part of chassis frame):

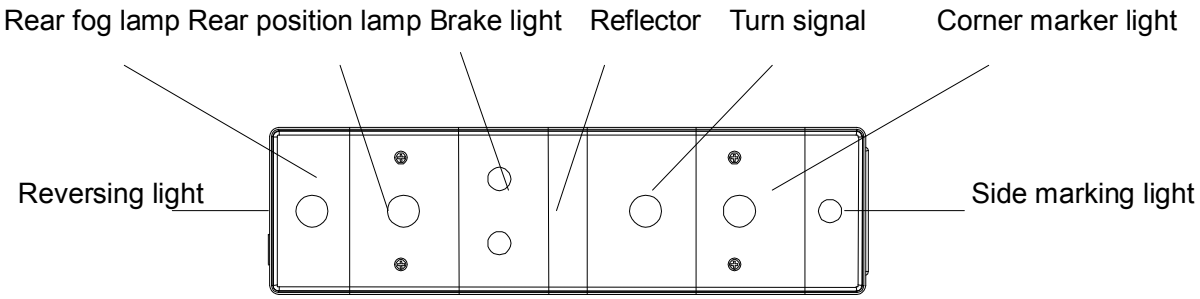

Right rear combination signals are combined in a rectangle plate.

The lighting color of the signals:

Corner marker light: red

Turn signal: amber

Brake light: red

Rear position lamp: red

Rear fog lamp: red

Reversing light: white

Side marking light: amber

Furthermore, check the following illuminations and photoelectric warning devices before setting off.

1) Interior illumination

It is installed on the roof of the driver's cab to supply interior illumination.

2) Outrigger illumination

It is installed near the outrigger beams to supply illumination for sliding beams. It is convenient for the operator to observe working conditions of sliding beams at night.

3) Support control unit illumination

It is installed in the support control unit to supply illumination for support control unit at night.

4) Buzzer

The reversing light illuminates and the buzzer sends out slow alarm when shifting to reversing gear.

The warning light “Brake pressure too low” illuminates and the buzzer sends out slow alarm if the pressure of the air brake system is too low.

The warning light “Engine cooling water temperature too high” illuminates and the buzzer sends out slow alarm if the water temperature is too high.

Danger:

Danger of accident if lighting is defective!

Arrange to have any defective lights repaired by an expert before setting off!

12. Driver's cab

1) Adjusting the driver's seat

The driver's seat has pneumatic suspension and can be adjusted to suit any driver height or size.
a. Adjust backrest setting
b. Adjust rear cushion angle
c. Adjust front cushion angle
d. Adjust horizontal setting

Note:
Functions of driver's cab are not completely the same as the co-driver's seat's. For detailed information, refer to Chapter 3.1.10.

2) Adjusting the mirror

- Clean outside mirrors before setting off and adjust to suit driver's field of view.
- Adjust outside mirrors manually.

Result:

a. You can switch between the left and right outside mirrors.

b. Mirror is adjusted.

3) Adjusting the steering wheel

The steering wheel is adjusted mechanically.

- Operate the control handle of steering wheel (See Chapter 3.1.1).

Result:

The angle and height of the steering wheel are adjusted to suit the driver.

Danger:

Risk of fatal injury if adjust the steering wheel, driver’s seat and outside mirrors during the drive!

4) Turning heater / ventilation on

The cab can be heated or ventilated to the desired temperature.

For a detailed operation, see chapter 3.1.5.

- To adjust the heater or ventilation, use the keypad in air conditioning control panel.

Caution:

The shutoff gate valve on the hot-water pipe of heater at the bottom of driver's cab must be turned off when using air conditioning in summer and turned on in winter.

5) Checking main controls

Ensure that the battery master switch is on when carrying out following checks.

Check the following components:

a. High beam

b. Front fog lamp

c. Rear fog lamp

d. Fan

e. Windshield wiper / washer system / windshield washing fluid container

f. Horn

g. Rotating beacons

Danger:

Danger of fatal injury due to defective main controls! Arrange to have any defective functions repaired by an expert before setting off.

13. Fuse

a. Open the cover of the center console and take it out;

b. Open the cover of fuse box;

c. Check the fuse and replace the defective one.

Warning:

Use the fuse of same size and specification; otherwise, the electrical system will be damaged.

3.2.2 Axle suspension / axle locking system

3.2.2.1 General

Axles 1 and 2 are hydro-pneumatically sprung. Axles 3, 4 and 5 are leaf-spring sprung.

3.2.2.2 Adjusting axle suspension

Only axles 1 and 2 are hydro-pneumatically sprung.

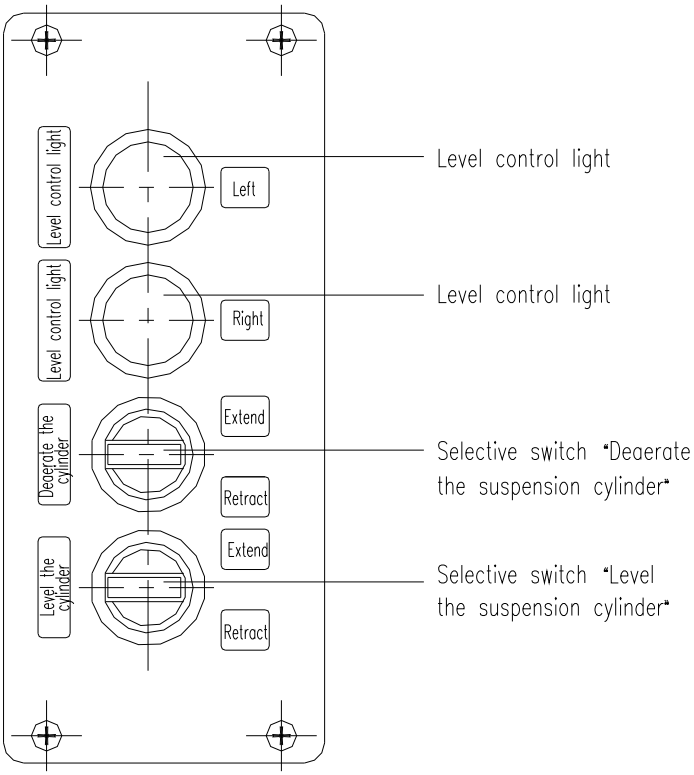

Illustration – Commissioning box for hydro-pneumatic suspension

Level control for axles 1 and 2:

Warning:

For road driving, perform level control on a level and load-bearing surface.

Never raise or lower the vehicle when driving on an uneven road surface.

Ensure that the following preconditions are met:

a. The vehicle is on a level surface

b. The engine is running

c. The transmission is in neutral "N"

Warning:

Do not perform level control unless the vehicle is stationary!

Warning:

Level control can only be performed by an expert. Otherwise, all consequences are rest with yourself.

Set the selective switch “Deaerate the suspension cylinder” to “Retract” position to deaerate the suspension cylinder when the first commissioning is performed.

1) Automatic level control

The crane is automatically moved to a level position by the selective switch “Level the suspension cylinder" on the commissioning box (level control can only be performed in the correct control direction).

If the inductive switch on the suspension cylinder of the left axle 1 (the lower inductive switch) lights up while the inductive switch on the suspension cylinder of the right axle 1 (upper inductive switch) does not light up, it means that the suspension has been leveled. At this moment, operating the selective switch “Level the suspension cylinder” will be invalid to the suspension. When the selective switch is turned to “Extend” position, one of the level control light lights up; when the selective switch is turned to “Retract” position, another level control light lights up.

2) Manual level control

The crane is manually moved to a level position by operating the selective switch “Deaerate the suspension cylinder” on the commissioning box.

- Adjust the selective switch “Deaerate the suspension cylinder” until one of the level control light goes out and another lights up.

Caution:

If the lifted load or the working mode of crane is changed greatly, the automatic level control and manual control level may be invalid. At this time, perform the level control in the following steps:

1. Set off the crane and then turn the selective switch “Deaerate the suspension cylinder” to “Extend” position to raise the suspension cylinder up to the limit position and keep for a long time;
2. Extend the four suspension cylinders completely and ensure they are of the same length;
3. Close the left and right throttling valves completely (adjust the valve to retract the hexagon nut end to the limit position), and then rotate the valve for two rounds (make the hexagon nut end extend a little);
4. Use the selective switch “Level the suspension cylinder" to level the crane. Then detect the lengths of the left and right cylinders. If the left cylinder is longer than the right one more than 10mm, turn the left throttling valve for 1/2 or 1/4 to close it a little; whereas, adjust the right throttling valve;
5. Repeat the steps for extending cylinders and leveling the crane until the difference between the left and right cylinders’ lengths is within 5mm (precise requirement) or 10mm (qualified requirement).

Warning:

Hydro-pneumatic suspension height can only be adjusted when the vehicle front / rear heights are different and when the vehicle is stationary.

The axle suspension must be locked before supporting the crane.

Turn off the 2-handed button for locking the axle suspension, then the control light for axle “Sprung” lights up. The chassis suspension is locked.

Caution:

When axle suspension is locked, manual level control can not be performed.

The vertical cylinders must be extended until all wheels are away from the ground.

Warning:

Risk of danger! The crane may topple over when its stability is lowered.

Warning:

Do not unlock the axle suspension before wheels contact the ground.

Danger:

When the axle locking system is used:

a. Ensure that no persons are presented in the crane danger zone!

b. Perform level control on a level and load-bearing surface.

3.3 Driving the crane

3.3.1 Crane driving conditions

Ensure that the following prerequisites are met:

— During driving, the hook, counterweight, jib and auxiliary winch are not equipped.

— Before the crane can be driven on public roads, the telescopic boom must be fully telescoped in and placed on the boom bracket.

— Sliding beams must be fully retracted and secured with pins.

— The axle suspension system has been set to "Sprung".

— The vehicle is at the level setting for road driving.

Warning:

Do not drive the crane on public roads with hook, counterweight, jib and auxiliary winch. Otherwise the axle load will be overloaded.

Warning:

Axle load should comply with the related regulations and standards of local country and region.

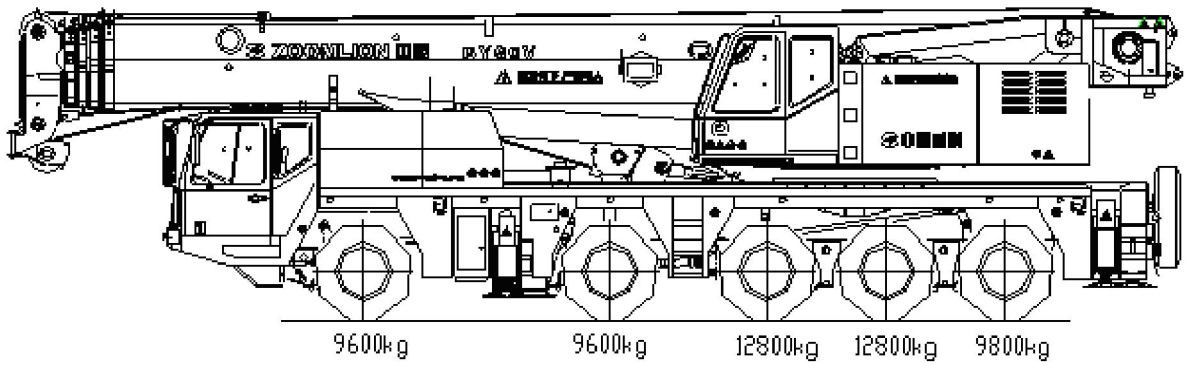

Illustration - Driving condition

3.3.2 Starting and turning off the engine

1) Starting the engine

Caution:

Before starting the engine, ensure the following prerequisites are met:

— The battery master switch has been turned on.

— The parking brake has been applied.

— The transmission is in neutral “N”.

How to start the engine:

— Turn the ignition starter switch (See Chapter 3.1.1) to position ON for preparation.

— Turn the ignition starter switch to position S.

Caution:

If the engine does not start after a maximum of 10 seconds, wait for 1 minute. The starter can be operated three times per attempt with a pause in between of one minute respectively. If the engine stops within 4 seconds after it is started, the sensor of engine control system defects. In order to avoid engine stopping, turn the ignition starter switch to position 0. Preheat for about 10 seconds before starting. The engine will run with defects and the warning light “Engine defects” will illuminate simultaneously.

Starting the engine with heating system:

To improve the cold start process and the warm-up phase (the ambient temperature below -20℃), the engine is equipped with a flame starting device.

Checking the instruments after starting the engine

The following warning lights must extinguish when the engine is running:

a. Charge monitoring warning light

b. Brake pressure too low warning light

Warning:

Do not perform full-load operation to the engine if engine temperature does not achieve normal level.

If the following events occur, turn off the engine immediately:

a. Dropping or sharply fluctuating oil pressure;

b. Reduced power and RPM without a change in engine control;

c. The appearance of large amounts of smoke;

d. Suddenly occurring abnormal engine noises.

2) Turning off the engine

Caution:

Ensure that the following prerequisites are met:

The battery master switch has been turned on.

The parking brake has been applied.

The transmission is in neutral “N”.

Plug out the key and store it after turning off the engine.

3.3.3 Driving

1) Changing the idle speed

Caution:

Apply service brake before shifting from "N" to "D". The engine RPM will decrease if shifting to the required gear.

Warning:

Run the engine at idle speed before shifting from "N" to "D" or “R” with the vehicle stationary.

2) Setting axle suspension and level control

Set axle suspension to "Sprung" and ensure vehicle level.

3) Releasing the parking brake

Pull back the hand lever of parking brake as far as the stop in the hand lever's longitudinal direction and push forward.

Warning:

Do not release parking brake if the air pressure is lower than 5.5bar. That is to say, do not release parking brake if the “Brake pressure too low” warning light is on.

Release the parking brake until the warning light goes off!

Caution:

When the parking brake is released, the crane can immediately start to move.

4) Checking brake system

5) Service brake

Apply engine control to increase engine RPM. The vehicle begins to move.

Apply service brake and check the service brake.

6) Retarder

The retarder consists of engine compression brake and exhaust brake.

Warning:

Utmost care should be taken when operating the retarder!

Caution:

The retarder can only be operated with the engine turned on. If the retarder is being operated, it is not possible to be accelerated by engine control.

Sensible use of the retarder and anticipating driving methods reduces wear on the brake and thereby reduces operating costs.

On long descending gradients, use retarder to realize continuous driving. Use the brake in an emergency. Correctly use the retarder as possible as you can to relax the service brake.

Caution:

Apply the same gear as that on long ascending gradients.

If the engine RPM is proper, shift the transmission to a lower stage to increase the decelerating effect.

Careful use of the retarder will ensure safe and sure deceleration even under bad road surface conditions.

Danger:

In the event that the wheels lock when operating the brake, select a lower switching stage!

3.3.4 Engine error codes and diagnosis

This crane is equipped with Weichai engine which is of diagnostic function. If the ECU detects errors occurring in electrical system, it will:

send error codes and store them in;

make warning light A illuminate;

activate protective device automatically.

If warning light A illuminates, it indicates the engine is defective. Stop the crane and remedy till the warning light goes off.

If warning light A does not illuminate, but the error code is still displayed, it indicates stored error codes or not very serious defect which will not affect normal operation.

Under most circumstance, the protective device activated will decrease the engine RPM to guarantee the engine running with fault. However, the serious fault will lead to engine shutdown.

Calling up the error codes:

- Diagnostic instrument or
- Activate the engine fault diagnosis switch. The error codes will be flashed out in warning light B. Refer the Blink code list for detailed information.

How to read the error codes:

1. Read the error codes from the fault diagnostic system;
2. Read the error codes by the engine defects warning light.

Press the engine fault diagnosis switch. The error codes will be flashed out in engine defects warning light. Refer the Blink code list for detailed information.

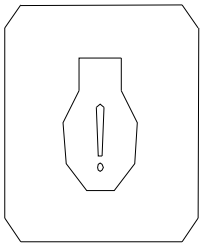

Engine defects warning light

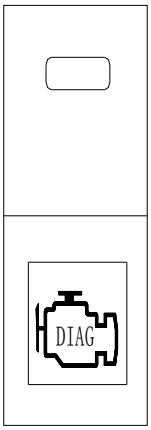

Engine fault diagnosis switch

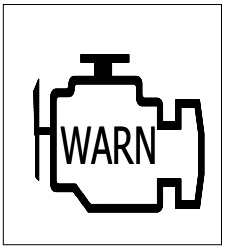

Engine error code displayed warning light A

ECU can store 10 error codes.

A blink code consists of 3 digital numbers. Each digital number flashes every 1 second, such 321.

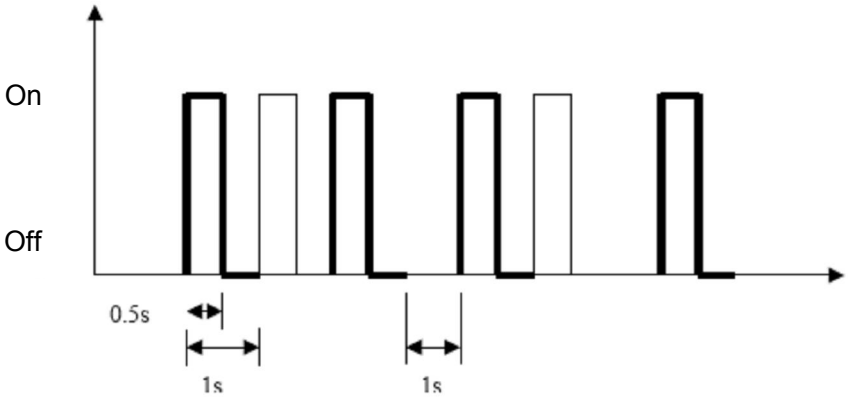

Illustration

Note:

If the engine fault diagnosis switch is active, the engine fault code displayed warning light will illuminate.

Stored error cleared up:

1) Turned the engine fault diagnosis switch and hold;
2) Turned ignition starter switch on (T15);
3) Hold the engine fault diagnosis switch for 4~8s and then release;
4) Turn off the breaker close to the battery to disengage the ECU;
5) Start the engine again;

Note:

Only the stored error can be cleared up. The current error cannot be cleared up.

Before clearing up the error stored in the ECU, remedy the current error first.

If the error codes cannot be cleared up, contact our specialist as soon as possible.

3.3.4.1 Blink code list

A blink code consists of 3 digital numbers. The 1st number refers to which system is defective, such as ECU, hydraulic system, sensor, actuator ect. The 2nd number refers to which component is defective. The 3rd number refers to defective path (Abbr. Dfps).

Note:

1. This manual is just aimed at the electrical fault of diesel engine national stage III. For mechanical fault, please refer to the instructions available in the manual of diesel engine national stage II;
2. The diesel engine national stage III adopts electrical controlled system, which is different from the mechanical one. If the engine is defective, special diagnostic instrument is needed;
3. Weichai diesel engine national stage III adopts Bosch common rail system which has high requirement to oil lines (concluding low pressure oil line and high pressure oil line). Many faults are caused by defective oil line. However, the harness is also a main fault source;
4. The blink code is just a pre-judge to ECU internal fault. Further diagnosis needs to use diagnostic instrument.

Classification of error code (classified with system)

	1	2	3	4	5
	Relative movements to system running	**Important sensors**	**Accessories and their functions**	**injector & CAN message**	**External tests**
1	start relative, synchronization	Diesel oil coarse filter	cooling system	network manage	misfire-detection
2	start relative, components	propulsion component	air heater	Frame manager	engine test
3	power supply, main relay	air system component	ErlpCD	Frame manager	
4	Bank & Chip	cooling & lubrication system	button	Frame manager	
5	Injector system	rail pressure monitoring	EGR (not used in National stage III engine)	governor deviation	
6	CRS component	ECU& overrun monitoring			

Blink code list

System	Component	Dfps	Blink Code		
start relative	AD converter	Dfp_ADCMon	1	1	1
start relative	Synchronization	Dfp_EngMCrS1	1	1	2
start relative		Dfp_EngMCaS1	1	1	3
start relative		Dfp_EngMBackUp	1	1	4
start relative	ECU time processing unit	Dfp_TPUMon	1	1	5
start relative	ECU internal	Dfp_SOPTst	1	1	6
start relative	start relay	Dfp_StrtCDHS	1	2	1
start relative		Dfp_StrtCDLS	1	2	1
start relative	start system T15	Dfp_T50CD	1	2	2
start relative	start system T50	Dfp_T15CD	1	2	3
start relative	Battery	Dfp_BattCD	1	2	4
start relative	start system	Dfp_FMTC_NonMonotonMap	1	2	5
start relative	ECU power supply	Dfp_SSpMon1	1	3	1
start relative		Dfp_SSpMon12V	1	3	1
start relative		Dfp_SSpMon2	1	3	1
start relative		Dfp_SSpMon3	1	3	1
start relative	main relay	Dfp_MnRly1_SCB	1	3	2
start relative		Dfp_MnRly1_SCG	1	3	2
start relative		Dfp_MRlyCD	1	3	2
CRS component	rail pressure sensor	Dfp_RailCD	1	3	3
CRS component		Dfp_RailCDOfsTst	1	3	3
CRS component	Pressure relief valve of CRS	Dfp_PRVMon	1	3	4
CRS component	flow-measurement unit	Dfp_MeUnCD_ADC	1	3	5
CRS component		Dfp_MeUnCDNoLoad	1	3	5
CRS component		Dfp_MeUnCDSCBat	1	3	5
CRS component		Dfp_MeUnCDSCGnd	1	3	5
Cylinder1	cylinder 1 injector	Dfp_InjVlvCyl1A	1	4	1
Cylinder1		Dfp_InjVlvCyl1B	1	4	1
Cylinder2	cylinder 2 injector	Dfp_InjVlvCyl2A	1	4	2
Cylinder2		Dfp_InjVlvCyl2B	1	4	2
Cylinder3	cylinder 3 injector	Dfp_InjVlvCyl3A	1	4	3

System	Component	Dfps	Blink Code		
Cylinder3		Dfp_InjVlvCyl3B	1	4	3
Cylinder4	cylinder 4 injector	Dfp_InjVlvCyl4A	1	4	4
Cylinder4		Dfp_InjVlvCyl4B	1	4	4
Cylinder5	cylinder 5 injector	Dfp_InjVlvCyl5A	1	4	5
Cylinder5		Dfp_InjVlvCyl5B	1	4	5
Cylinder6	cylinder 6 injector	Dfp_InjVlvCyl6A	1	4	6
Cylinder6		Dfp_InjVlvCyl6B	1	4	6
Bank	Bank1 (control injectors 1, 2, 3)	Dfp_InjVlvBnk1A	1	5	1
Bank		Dfp_InjVlvBnk1B	1	5	1
Bank	Bank 2 (control injectors 4, 5,6)	Dfp_InjVlvBnk2A	1	5	2
Bank		Dfp_InjVlvBnk2B	1	5	2
chip	Chip (control fuel injection)	Dfp_InjVlvChipA	1	5	3
chip		Dfp_InjVlvChipB	1	5	3
injection	the number of working injector is too low	Dfp_InjVlvNumMinInj	1	5	4
injection	ECU limits fuel injection	Dfp_InjCrv_InjLim	1	5	5
important function	Water in fuel	Dfp_FlSys_WtDet	2	1	1
important function	propulsion	Dfp_APP1	2	2	1
important function	propulsion	Dfp_APP2	2	2	1
important function	propulsion	Dfp_ConvCD	2	2	2
important function	propulsion	Dfp_BrkCD	2	2	3
important function	propulsion	Dfp_AccPedPlausBrk	2	2	5
important function	propulsion	Dfp_EngPrtOvrSpd	2	2	6
important function	propulsion	Dfp_GearbxIncMax	2	2	7
important function	propulsion	Dfp_CoVMDCSh	2	2	8
important function	Air system	Dfp_BPSCD	2	3	1
important function	Air system	Dfp_APSCD	2	3	2
important function	Air system	Dfp_IATSCD	2	3	3
important function	Cooling system	Dfp_CTSCD	2	4	1
important function	Cooling system	Dfp_CTSCDOvrTemp	2	4	2
important function	Cooling system	Dfp_OPSCD	2	4	3
important function	Cooling system	Dfp_OPSCD1	2	4	3
important function	Cooling system	Dfp_OTSCD	2	4	4

System	Component	Dfps	Blink Code		
important function	Cooling system	Dfp_OTSCD1	2	4	4
important function	Cooling system	Dfp_Clg_AbsTst	2	4	5
important function		Dfp_Clg_DynTst	2	4	5
Rail Pressure Monitoring	Rail Meun	Dfp_RailMeUn0	2	5	1
Rail Pressure Monitoring		Dfp_RailMeUn1	2	5	2
Rail Pressure Monitoring		Dfp_RailMeUn3	2	5	3
Rail Pressure Monitoring		Dfp_RailMeUn4	2	5	3
Rail Pressure Monitoring		Dfp_RailMeUn12	2	5	4
Rail Pressure Monitoring		Dfp_RailMeUn2	2	5	4
Rail Pressure Monitoring		Dfp_RailMeUn7	2	5	5
Rail Pressure Monitoring		Dfp_RailMeUn10	2	5	6
Rail Pressure Monitoring		Dfp_RailMeUn6	2	5	7
start relative	ECU Recovery	Dfp_HWEMonRcyLocked	2	6	1
start relative	ECU Recovery	Dfp_HWEMonRcySuppressed	2	6	1
start relative	ECU Recovery	Dfp_HWEMonRcyVisible	2	6	1
start relative	OvrMon	Dfp_OvRMon	2	6	2
start relative		Dfp_OvRMonSigA	2	6	2
start relative	ECU Monitoring	Dfp_HWEMonCom	2	6	3
start relative	ECU Monitoring	Dfp_HWEMonUMaxSupply	2	6	3
start relative	ECU Monitoring	Dfp_HWEMonUMinSupply	2	6	3
start relative	ECU Monitoring	Dfp_Montr	2	6	4
start relative	ECU Monitoring	Dfp_HWEMonEEPROM	2	6	5
accessory	Exhaust flap	Dfp_ExFlCD_Max	3	1	1
accessory		Dfp_ExFlCD_Min	3	1	1
accessory		Dfp_ExFlCD_SigNpl	3	1	1
accessory	A/C compressor relay	Dfp_ACCDCmpr	3	1	3
accessory	glow system	Dfp_ArHt1	3	2	1
accessory		Dfp_AirHtStickOn	3	2	2
accessory		Dfp_AirHt_Test1	3	2	3
accessory		Dfp_AirHt_Test2	3	2	3
important function	propulsion	Dfp_VSSCD1	3	2	4
important function		Dfp_VSSCD2	3	2	4

System	Component	Dfps	Blink Code		
important function		Dfp_VSSCD3	3	2	4
accessory	switch	Dfp_MSSCD	3	2	7
accessory	lamp	Dfp_SysLamp	3	3	1
accessory	cold start lamp	Dfp_CSLPCD	3	3	2
accessory	warning lamp	Dfp_Wrn	3	3	2
accessory	water in fuel level sensor	Dfp_Gen1	3	3	4
accessory	warning lamp	Dfp_Gen3	3	3	4
accessory	Tempomat switch	Dfp_MFLvCrCtlMode	3	4	1
accessory	Exhaust brake switch	Dfp_EBSwPreSelPlaus	3	4	2
accessory	chassis ignition starter switch	Dfp_ECBtCD	3	4	3
external test	external test	Dfp_CmbChbMisfire1	5	1	1
external test		Dfp_CmbChbMisfire2	5	1	2
external test		Dfp_CmbChbMisfire3	5	1	3
external test	external test	Dfp_CmbChbMisfireMul	5	1	4
external test	external test	Dfp_ComprTst	5	2	1
external test		Dfp_HpTst	5	2	2
external test		Dfp_RunUpTst	5	2	3
external test	external test	Dfp_CmbChbMisfire4	5	3	1
external test		Dfp_CmbChbMisfire5	5	3	2
external test		Dfp_CmbChbMisfire6	5	3	3
external test	external test	Dfp_ShOffTst	5	3	4
start relative	Synchronization signal	Dfp_EngMOfsCaSCrS	5	4	1

Note:
If “ECU error” is flashed out, please contact with our after-sales department.

Blink code with CAN assembled (Not used in this crane)

System	Component	Dfps	Blink Code		
accessory		Dfp_ACCDSwtin	3	1	3
CAN message	Network manage	Dfp_NetMngCANAOff	4	1	1
CAN message	Network manage	Dfp_NetMngCANBOff	4	1	2
CAN message	Network manage	Dfp_NetMngCANCOff	4	1	3
CAN message	Communication Monitoring	Dfp_WdCom	4	1	4
CAN message	Receive timeout	Dfp_FrmMngTOEngGsFlowRt	4	1	5
CAN message	Receive timeout	Dfp_FrmMngTOHRVD	4	1	6
CAN message	Receive timeout	Dfp_FrmMngTOTimeDate	4	1	7
CAN message		Dfp_FrmMngTOTSC1AE	4	2	1
CAN message		Dfp_FrmMngTOTSC1AR	4	2	1
CAN message		Dfp_FrmMngTOTSC1DE	4	2	2
CAN message		Dfp_FrmMngTOTSC1DR	4	2	2
CAN message		Dfp_FrmMngTOTSC1PE	4	2	3
CAN message		Dfp_FrmMngTOTSC1TE	4	2	4
CAN message		Dfp_FrmMngTOTSC1TR	4	2	4
CAN message		Dfp_FrmMngTOTSC1VE	4	2	5
CAN message		Dfp_FrmMngTOTSC1VR	4	2	5
CAN message	Communication Monitoring	Dfp_FrmMngTxTO	4	3	1
CAN message	Receive timeout	Dfp_FrmMngRxEngTmp2Sens	4	3	2
CAN message	Receive timeout	Dfp_FrmMngEngGsFlRtHtr	4	3	3
CAN message	Receive timeout-no used	Dfp_FrmMngTODashDspl	4	3	4
CAN message		Dfp_FrmMngTOWSI	4	3	5
CAN message	Receive timeout	Dfp_FrmMngTOEBC1	4	4	1
CAN message	Receive timeout	Dfp_FrmMngTOERC1DR	4	4	2
CAN message	Receive timeout	Dfp_FrmMngTOETC1	4	4	3
CAN message	Receive timeout-no used	Dfp_FrmMngTORxAMCON	4	4	4
CAN message	Receive timeout-no used	Dfp_FrmMngTORxCCVS	4	4	5
CAN message	Receive timeout	Dfp_FrmMngTOTCO1	4	4	6
CAN message	Receive timeout	Dfp_FrmMngTORxEngTemp2	4	5	1
CAN message	Receive timeout	Dfp_FrmMngTOTF	4	5	2

Functions, sensors and actuators not used in National Stage III engine

System	Component	Dfps	Blink Code		
important function	Fuel Filter	Dfp_FlSys_FltFoul	2	1	2
important function	Fuel Filter	Dfp_FlFCD_FltFoulMax	2	1	3
important function	Fuel Filter	Dfp_FlFCD_FltFoulMin	2	1	3
important function	Fuel Filter	Dfp_FlFCD_FltFoulNpl	2	1	3
important function	Fuel Filter	Dfp_FlFCD_WtLvlMax	2	1	4
important function	Fuel Filter	Dfp_FlFCD_WtLvlMin	2	1	4
important function	Fuel system	Dfp_FTSCD	2	1	5
important function	Fuel Filter	Dfp_FlFCD_Htg	2	1	6
important function	Air system	Dfp_AFSCD_AirTemp	2	3	4
important function	Air system	Dfp_AFSCD_PlOffsDrft	2	3	4
important function	Air system	Dfp_AFSCD_PlSetyDrft	2	3	4
important function	Air system	Dfp_AFSCD_SRCAirm	2	3	4
important function	Air system	Dfp_EATSCD	2	3	5
important function	Air system	Dfp_EATSCDBET	2	3	5
important function	Air system	Dfp_EATSCDClgZn	2	3	5
important function	Air system	Dfp_EATSCDInAir	2	3	5
important function	Cooling system	Dfp_CLSCD	2	4	6
important function	Cooling system	Dfp_OLSCD	2	4	7
important function	Air system	Dfp_IAHSCD	2	3	6
accessory		Dfp_FanCD	3	1	2
accessory		Dfp_FanCD2	3	1	2
accessory		Dfp_FanCDEval	3	1	2
accessory		Dfp_ASLLCD	3	3	3
accessory		Dfp_MIL	3	3	3
accessory		Dfp_Gen2	3	3	4
accessory		Dfp_EGPpCDP3	3	4	5
not used		Dfp_CABCD	2	2	4
not used		Dfp_CRERCD_Actr	3	2	5
not used		Dfp_PSPCD_Actr	3	2	6
not used	PWM-no used	Dfp_BPACD_ADC	3	4	4
not used	PWM-no used	Dfp_BPACD_Max	3	4	4
not used	PWM-no used	Dfp_BPACD_Min	3	4	4
not used	PWM-no used	Dfp_BPACD_SigNpl	3	4	4

System	Component	Dfps	Blink Code		
not used	EGR	Dfp_ECBCD	3	5	1
not used	EGR	Dfp_EGRCD_Max	3	5	1
not used	EGR	Dfp_EGRCD_Min	3	5	1
not used	EGR	Dfp_EGRCD_SigNpl	3	5	1
not used	Air system-no used	Dfp_TVACD_Max	3	5	2
not used	Air system-no used	Dfp_TVACD_Min	3	5	2
not used	Air system-no used	Dfp_TVACD_SigNpl	3	5	2
not used	Governor deviation-not used	Dfp_AirCtlGvnrDvtMax	4	5	3
not used	Governor deviation-not used	Dfp_AirCtlGvnrDvtMin	4	5	3
not used	Governor deviation-not used	Dfp_PCRGvnrDvtMax	4	5	4
not used	Governor deviation-not used	Dfp_PCRGvnrDvtMin	4	5	4
not used	external test	Dfp_VarMngCodDs	5	2	4

3.3.5 Important control instruments while driving

1) Checking the engine oil pressure

Normal range: 1 to 5.5 bar

Caution:

If the engine oil pressure is below 0.06 ± 0.015MPa, stop the engine immediately and check the lubricating system.

2) Checking compressed air supply

The two barometers resp. display the air pressure of main brake air reservoirs for front and intermediate / rear axle.

Caution:

If pressures of the air reservoirs are below 0.55MPa, the brake pressure too low warning light will light up and the buzzer will send out alarm simultaneously. Immediately bring the crane to a standstill and rectify the cause of the defect. Otherwise, it is very dangerous.

3) Checking the fuel reserve

Fuel quantity displays on bar chart in 1 or 0. 1 means fuel tank is full. 0 means fuel tank is empty.

Caution:

When the fuel quantity approaches bar chart 0, fill up the fuel reservoir with clean fuel to ensure normal driving. Do not drive when the fuel tank is empty, or the fuel system will have to be deaerated.

4) Checking the coolant temperature

Coolant temperature displays on thermometer. In normal conditions, the pointer points to the green range. The pointer points to the red range when driving in high temperature area or climbing an ascending gradient.

Caution:

If the pointer points to the red range for a long time while driving, immediately bring the crane to a standstill and check the engine coolant system. Otherwise, this will result in engine damage.

3.3.6 Off-road driving

This vehicle is equipped with differential locks for driving off-road.

Caution:

The differential locks can only be applied when the vehicle is stationary.

Warning:

In order to avoid damages to driven axles, the following prerequisites must be met:

a. Only apply differential locks when the vehicle is stationary!

b. Danger of damaging axle elements! Never apply differential locks when the drive wheels are turning!

c. Drive carefully, do not start jerkily, only drive on straight routes!

d. Only drive on difficult terrain (e.g. slippery subsoil etc.) with differential locks.

The vehicle is equipped with following off-road driving devices:

1) Longitudinal differential lock for transfer case

2) Longitudinal differential lock for axle 4

3) Transversal differential locks for axles 2, 4 and 5

Warning:

If do not need the differential locks anymore, turn the differential locks off as soon as possible. Considerable damages can be caused by driving on solid subsoil with good grip when a differential lock is on.

3.3.7 Towing

Warning:

The following towing regulations must be adhered to:

a. Release the parking brake when towing, or the brake system will be damaged.

b. When towing, the speed must always remain below 20 km/h.

c. Use the towing coupling to tow the vehicle.

d. Only tow with a tow bar.

e. Turn on the hazard warning system and the driving light.

1) Towing with a defective drive motor and / or shift transmission

If the drive motor cannot be started, a compressed air supply must be established from the towing vehicle to the crane. A hose coupling is attached at the front under the bumper to supply compressed air to the crane to be towed.

Warning:

The supply pressure of the compressed air brake system of the mobile crane to be towed must be at least 6bar.

With the engine turned off, the vehicle can only be driven from a speed of 5 km/h -10 km/h.

2) Towing with an intact drive motor

a. Towing with defective transfer case

Disconnect the propeller shafts from the transfer case to the driven axles: disconnect the propeller shafts on one end of the driven axle.

Using the drive range switch, switch the transmission to neutral "N" to make the engine to run at idle speed.

b. Towing with damage to the driven axles

Remove the defective driven axles.

Warning:

Only authorized and specially trained personnel can carry out towing arrangements in case of damage to the driven axles.

3.3.8 Finishing driving operations

1) Stopping

- Brake the crane until it comes to a standstill.
- The selected drive range can remain switched on.
- Use the service brake or parking brake to ensure that the crane does not roll away.

Caution:

For longer stop (more than 1 minute), shift the transmission into neutral "N". This will reduce clutch wear and prolong the service life of the clutch.

2) If the engine is running when stopping the vehicle

- Brake the crane until it comes to a standstill.
- Shift the transmission into neutral "N".
- Apply the parking brake and the parking brake control light lights up.

3.4 Outrigger – operation

The crane is equipped with 4 outriggers. Its outrigger beams are connected with the chassis frame and the 2 sections of sliding beams can extend and retract synchronously. A support control unit (switch box) with buttons is attached to both sides of the vehicle (rear sides of the front outrigger beams) for controlling the 4 outriggers to extend and retract simultaneously or independently.

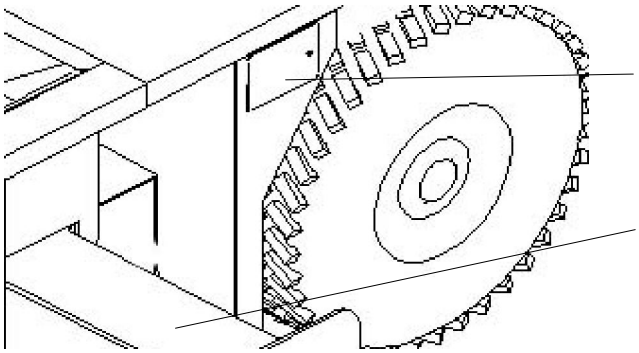

Illustration – Outrigger extended:

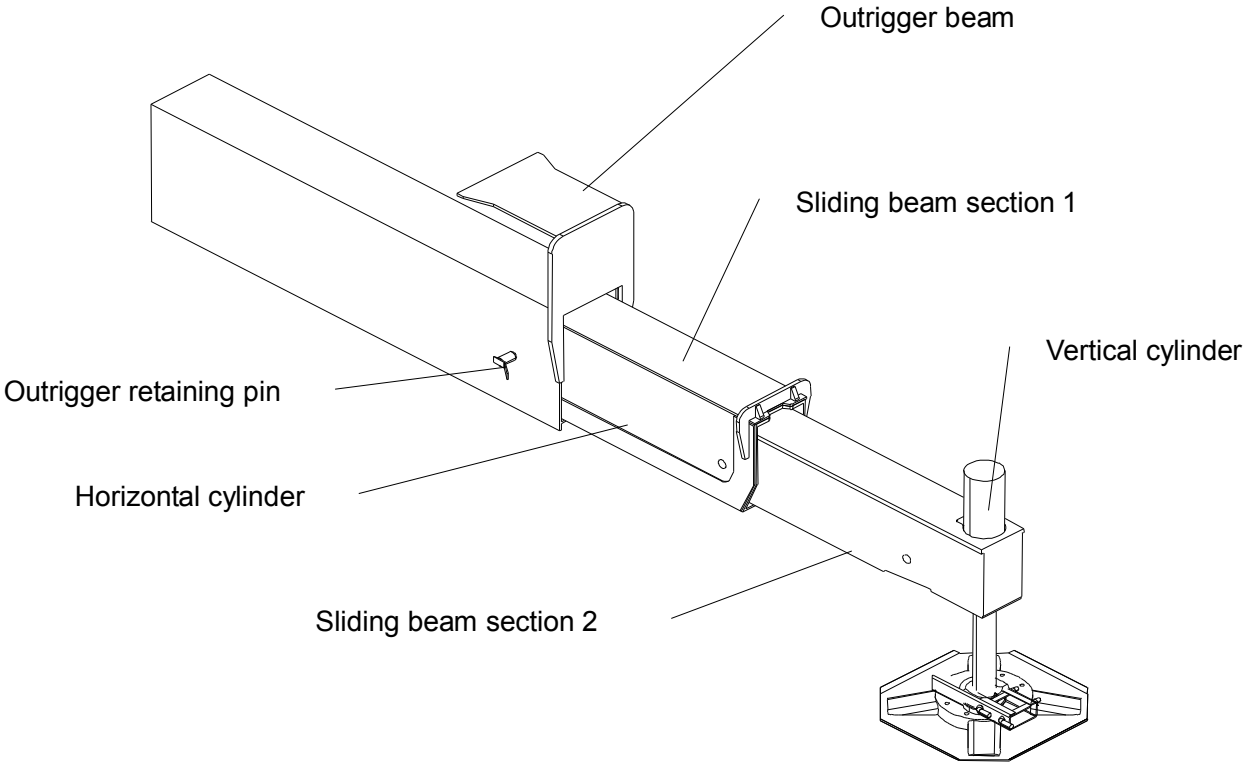

Warning:

Extend outriggers before crane operation. Select even and hard working sites. If the working site is soft or uneven, put suitable materials and bases beneath the outrigger pads.

3.4.1 Installing and removing the outrigger pads

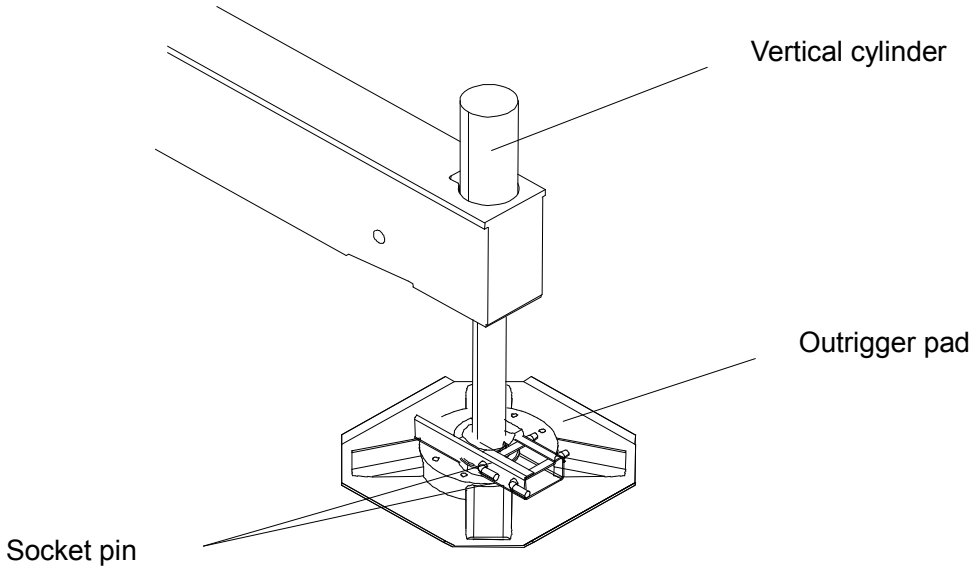

1) Installing the outrigger pad

Before the outriggers are extended, withdraw socket pin and pull outrigger pad outwards until the outrigger pad center meets the vertical cylinder. Insert socket pins and secure them.

2) Removing the outrigger pad

After the outriggers are retracted, withdraw the socket pin and slide outrigger pads inwards until it reaches the limit position. Insert socket pins and secure them.

3.4.2 Extending and retracting the outriggers

The two support control units with buttons are attached to both sides of the vehicle. Their functions are the same and the layouts of their buttons are symmetrically arranged. The extending / retracting of the outriggers and vertical cylinders, engine on / off and engine Rpm regulation can be controlled simultaneously or independently. The inclinometers on the center of the units display the crane's deviation (at the slewing ring). The two support control units are connected by cables. The signals of the right support control unit (auxiliary control unit) are transmitted to the left support control unit (main control unit) via the cables, and then to the valves and engine controllers etc. The two control units should be operated independently.

Extend outriggers before crane operation. Select even and hard working sites. If the working site is soft or uneven, put suitable materials and bases beneath the outrigger pads to ensure level and stable crane.

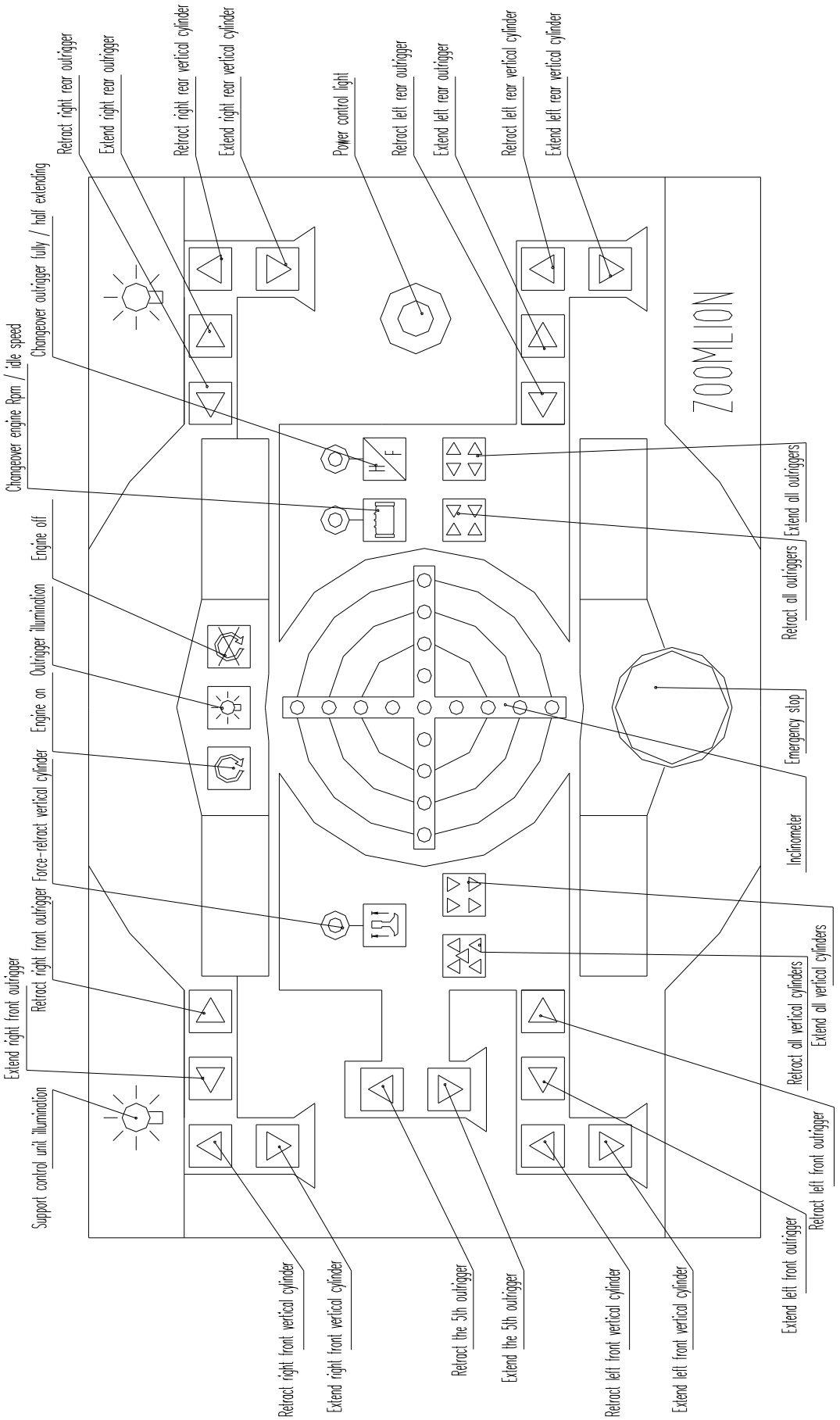

Left support control unit

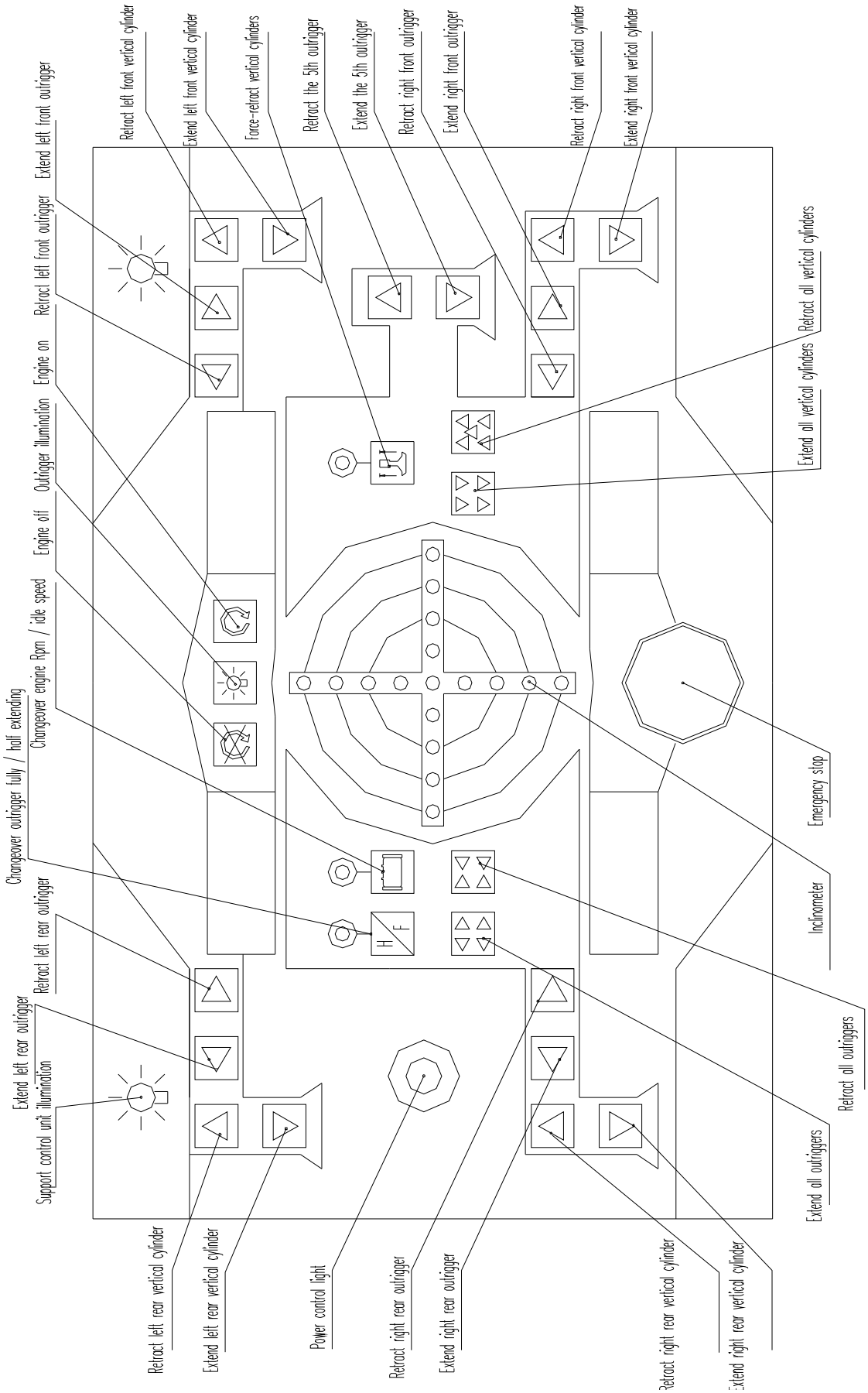

Right support control unit

How to extend outriggers and vertical cylinders with support control unit (Take left support control unit as an example):

Caution:

Turn the outrigger power switch on (in driver's cab, for detailed information, refer to Chapter 3.1.5). Only when the left and right outriggers are energized and the power control light illuminates, the following operations can be activated. If any of the emergency stop is activated, all extending and retracting movements of outriggers stop.

1) Put the outrigger pad to working position according to Chapter 3.4.1.

2) Remove the retaining pin.

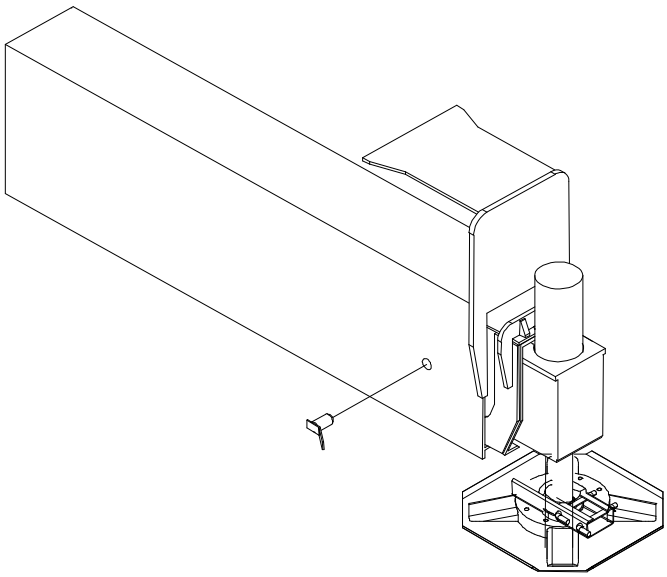

3) Open the support control unit with the key.

4) Switch engine on. The chassis engine and hydraulic system begin working.

5) Press corresponding buttons to extend right rear outrigger and right front outrigger. Release the buttons until the outriggers extend to a desire position.

6) Press corresponding buttons to extend left rear outrigger and left front outrigger. Release the buttons until the outriggers extend to a desire position. Press corresponding buttons to extend all outriggers simultaneously. Press corresponding buttons to extend right front, left front, right rear and left rear vertical cylinders to lift the crane up. Press corresponding buttons to extend all vertical cylinders. After all vertical cylinders are extended, check whether the crane is level with the inclinometer. Inclination angle should be no more than 1°. Press buttons to align the crane horizontally. If the vehicle is not horizontal, retract or extend the outrigger to level the crane.

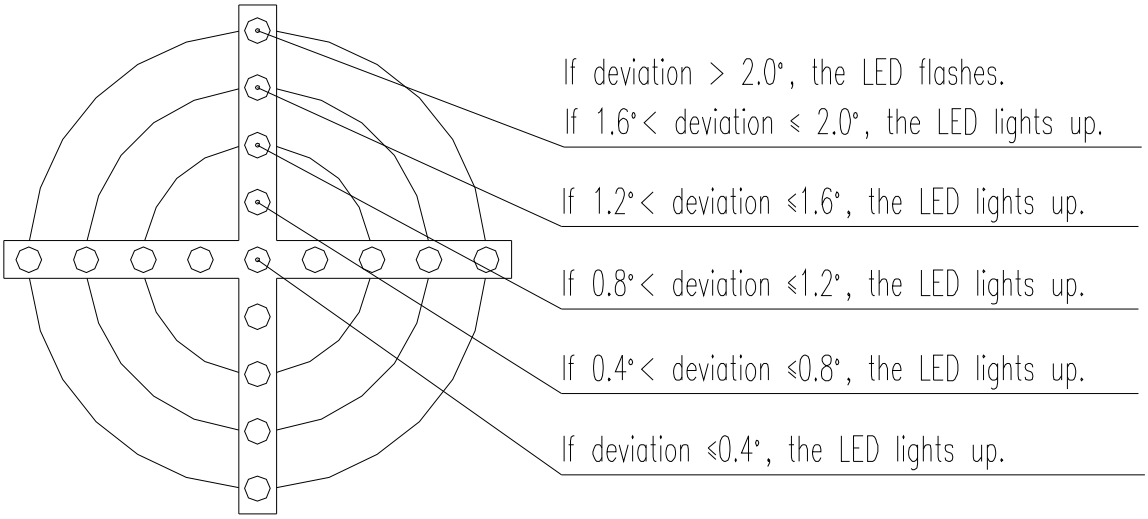

Illustration — Inclinometer

7) Secure and lock the outriggers with socket pins when the outriggers extended to a desired position.

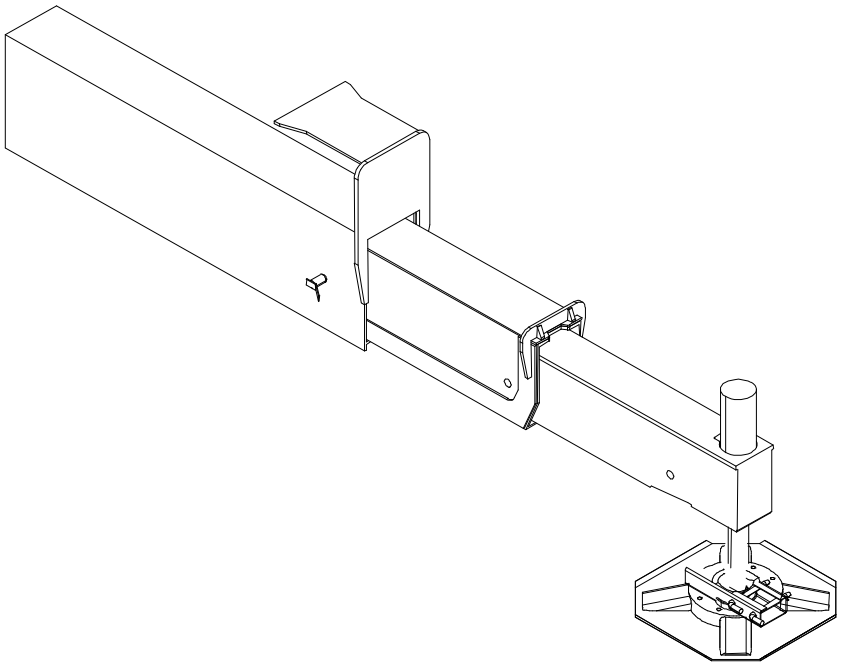

Retract the outriggers according to the reverse sequences.

Notes:

1) Press the engine off button. The chassis engine stops.

2) Set the changeover button “Engine Rpm / idle speed” to engine Rpm position by pressing this button. Set the changeover button “Engine Rpm / idle speed” to idle speed position by releasing this button. The outrigger speed can be changed via operating this button. Press button “Outrigger illumination” to turn on outrigger illumination. Press again to turn off outrigger illumination.

3) The button “Changeover outrigger fully / half extending” for the 5th outrigger is not used in this crane. The default mode for the 5th outrigger is fully extending.

   The movements, such as, extending / retracting the vertical cylinders and extending / retracing the outriggers, are interlocked. Once a certain button is activated, before its movement stops, the conversed movement cannot be activated.

   The movements, such as, one outrigger or vertical cylinder retracting / extending or all outriggers or vertical cylinders retracting / extending, are interlocked. If one outrigger or vertical cylinder is extended or retracted, the buttons for extending or retracting all outriggers or vertical cylinders are invalid. If all outriggers or vertical cylinders are extended or retracted, the buttons for extending or retracting one outrigger or vertical cylinder are invalid.

4) Calibrating vehicle deviation sensor to 0°

   The vehicle deviation sensor must be calibrated to 0° if the sensor or support control unit is reinstalled or replaced.

   ● How to calibrate:

   Extend the outriggers and vertical cylinders;

   Level the crane (Be sure the crane is level!);

   Press and hold buttons “Emergency stop” and “Extending and retracting the 5th outrigger” simultaneously for more than 10 seconds;

   Release these buttons until the central LED on the inclinometer lights up.

Caution:

a. Turn chassis engine off when crane superstructure works;

b. Remove the socket pins before extending and retracting the outriggers. Before driving, secure and lock the socket pins after the outriggers are fully retracted;

c. The speed for extending or retracting the outriggers can be adjusted by the engine control;

d. The clearance between sliding beam and outrigger beam can be regulated by the adjusting bolts. (For detailed information refers to Chapter 7.5.8);

e. The telescopic boom must be set down on the boom support when retracting and extending the outriggers;

f. Close covers for the support control units after operation or when cleaning the crane, so as to prevent water from entering;

g. If any of the emergency stop buttons is pressed, other buttons will be invalid.

3.5 The crane at the jobsite

Select crane operating location where the outriggers can be extended to provide the support specified in the load charts and the crane can be leveled.

3.5.1 Converting from driving mode to crane operation

Ensure that the following prerequisites are met:

a. The crane is on a level and load-bearing surface;

b. The parking brake is applied;

c. The transmission is in neutral position "N";

d. The engine is running.

The axle suspension must be locked before the crane is supported. Then, convert to crane operation.

3.5.2 Outrigger pad

Move the support pads from transport position to operating position. Place stable materials such as wood, steel plates or concrete slabs of a suitable size beneath the support pads, depending on the ground conditions.

3.5.3 Converting from crane operation to driving mode

Ensure that the following prerequisites are met:

a. The crane is supported and level. The wheels are not in contact with the ground;

b. The axle suspension is locked;

c. The telescopic boom is fully telescoped in and secured to the boom support at the front;

d. Secure the hooks and take the counterweights away;

e. The transmission is in neutral position "N".

3.5.4 Switching the axle locking off

Retract outrigger cylinders and the outriggers all the way by activating the axle suspension.

Warning:

If the axle block is turned off without the wheels being in contact with the ground, then the axle suspension can be damaged if the axles drop down.

3.5.5 Converting to driving mode

Ensure that the following prerequisites are met:
- The engine is turned off
- The ignition is turned off

Result:
- The crane is switched to driving mode.

3.5.6 Supporting the crane with support control unit

1) Extending the outrigger with support control unit

The operator must monitor the extension and retraction of the outriggers. Make sure that there are no persons or objects within the danger zone when extending or retracting the outriggers.

2) Extending vertical cylinders with support control unit

Warning:
Raise the crane until the wheels are no longer touching the ground. Do not extend the vertical cylinders to their limit positions for safety.

3.5.7 Checking outriggers

Make sure that four outriggers have been extended. If only the outriggers on the load side are extended, the crane may topple over.

3.5.8 Before leaving the work site

Perform the following checks before leaving the work site:

1) Check that the axle suspension is switched on.
2) Check whether the vertical and horizontal cylinders are fully retracted.
3) Check whether the outrigger pads are in transport position and have been secured.
4) Check whether the sliding beams have been fully retracted and pinned.
5) Check whether retaining pins have been secured in their holders.
6) Check whether the telescopic boom has been retracted and placed on the boom support.
7) Check whether the slewing table panels are locked.
8) Check whether the doors and windows of the crane cab are closed.
9) Check whether the spare wheel has been properly secured.
10) Check whether the hook block is lashed using the eye provided on the front towing coupling and whether towing coupling has been properly secured.
11) Check whether the counterweights, jib and auxiliary winch have been taken away from crane.

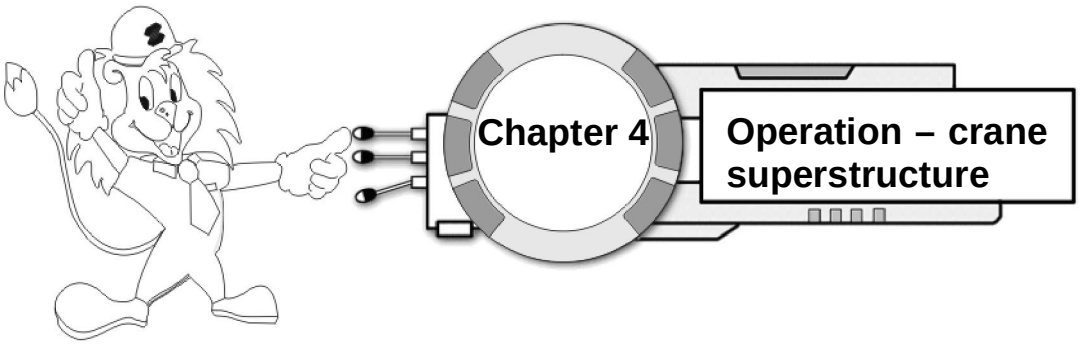

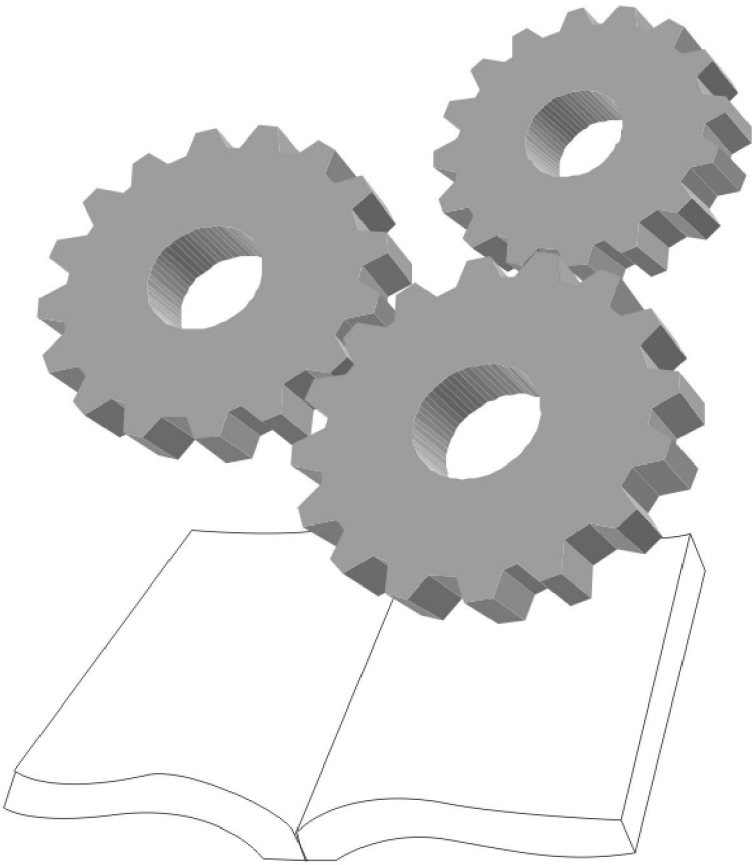

ZOOMLION

4.1 Control instruments and indicators

4.1.1 Operator's cab

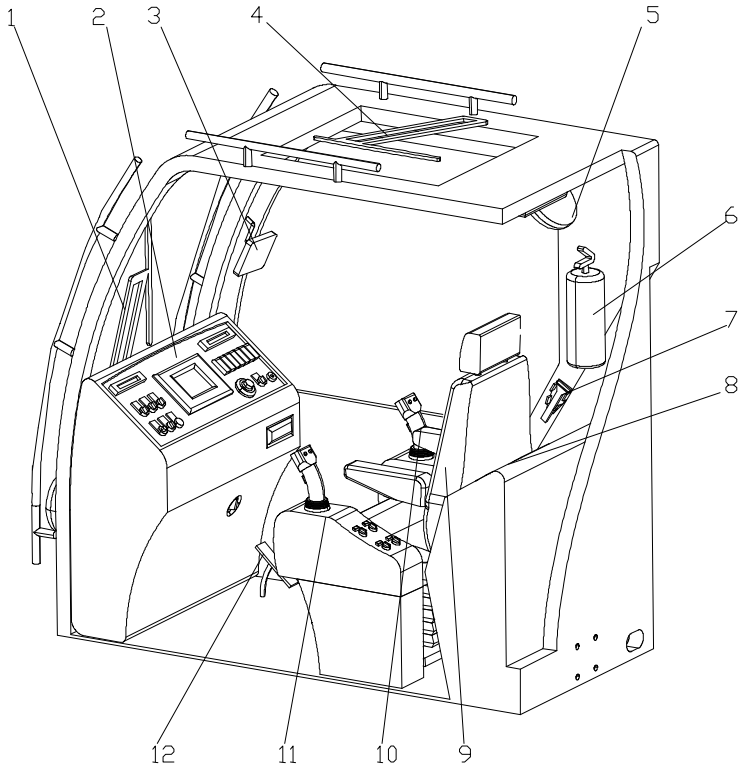

1	Front windshield wiper	2	Instrument console	3	Monitor for main winch
4	Roof window wiper	5	Fan	6	Fire extinguisher
7	Emergency hammer	8	A/C	9	Operator’s seat
10	Right control box	11	Left control box	12	Accelerator pedal

4.1.2 Operator's seat

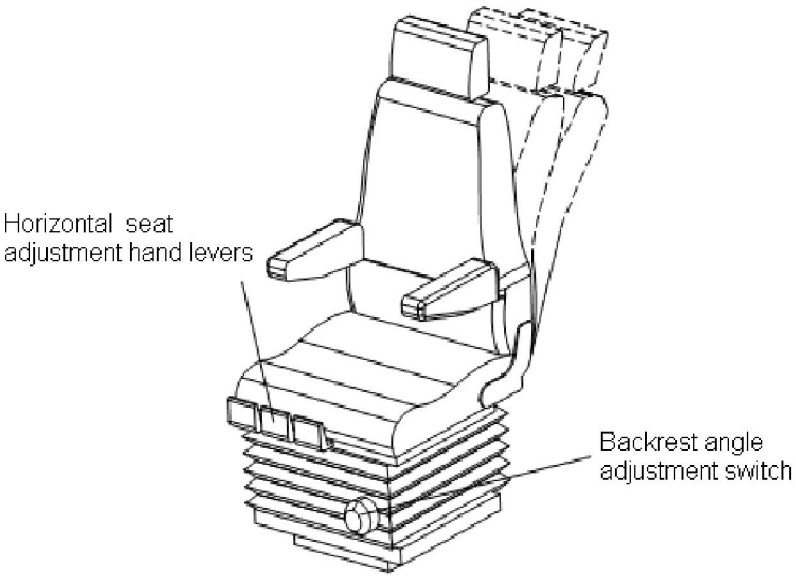

4.1.3 Right control box

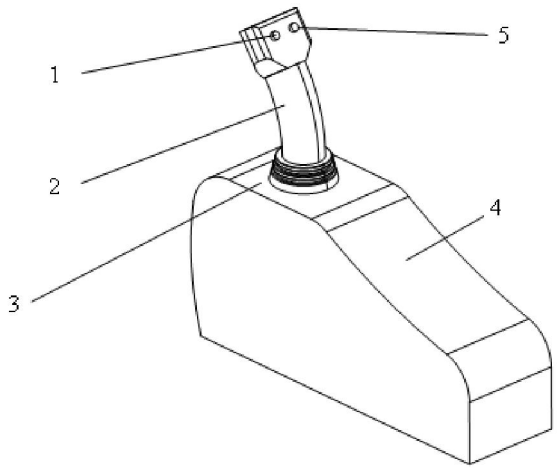

1	Button, rapid gear for main winch	2	Joystick, right	3	Operating illustration, right
4	Control panel, right (Blank)	5	Button (not used)		

4.1.3.1 Operating illustration, right

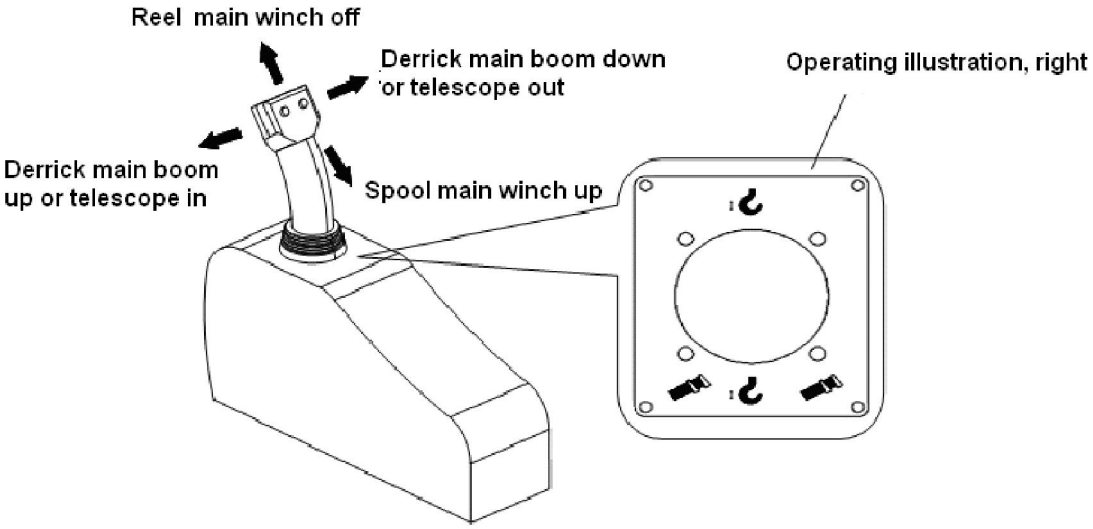

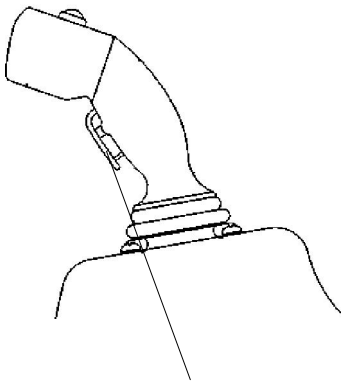

Right deadman switch

Note:

The right deadman switch is located on the back of right joystick. All operations controlled by left / right joystick will be valid once the deadman switch is pressed and held.

Warning:

Do not press the deadman switch for a long time with tools!

4.1.4 Left control box

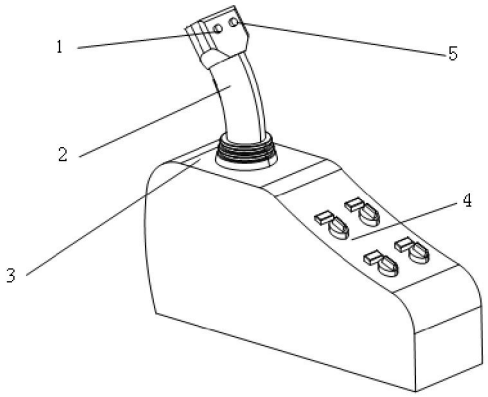

1	Button (electric horn)	2	Joystick, left	3	Operating illustration, left
4	Control panel, left	5	Button (not used)		

4.1.4.1 Operating illustration, left

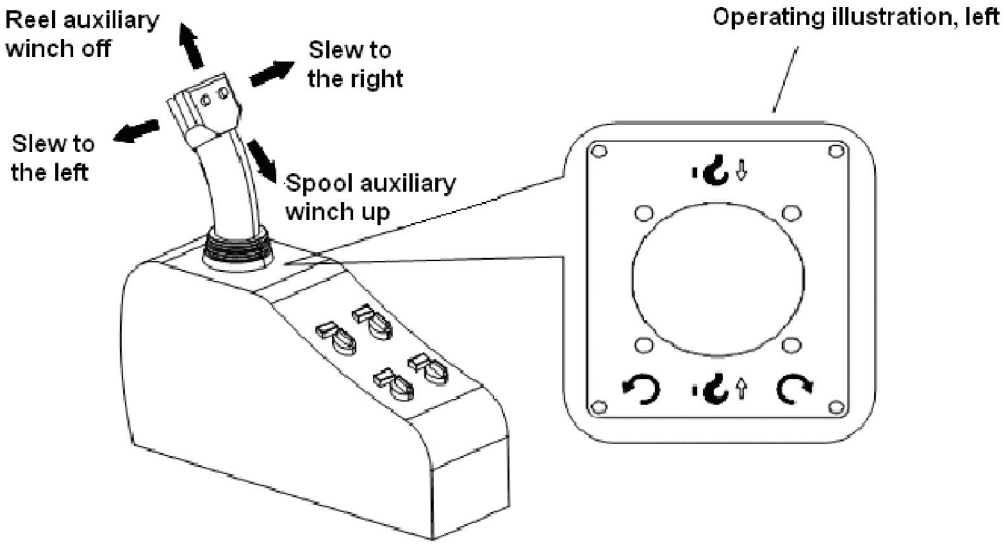

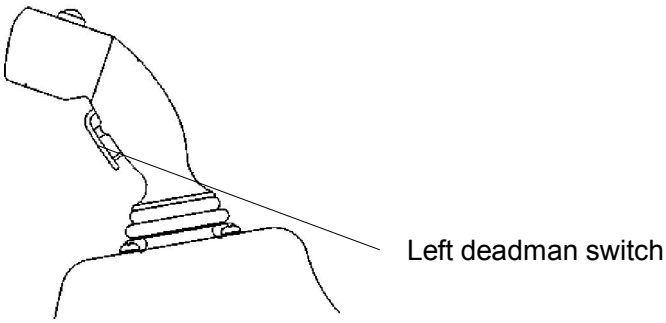

Note:

The left deadman switch is located on the back of left joystick. All operations controlled by left / right joystick will be valid once the deadman switch is pressed and held.

Warning:

Do not press the deadman switch with tools for a long time!

4.1.4.2 Control panel, left

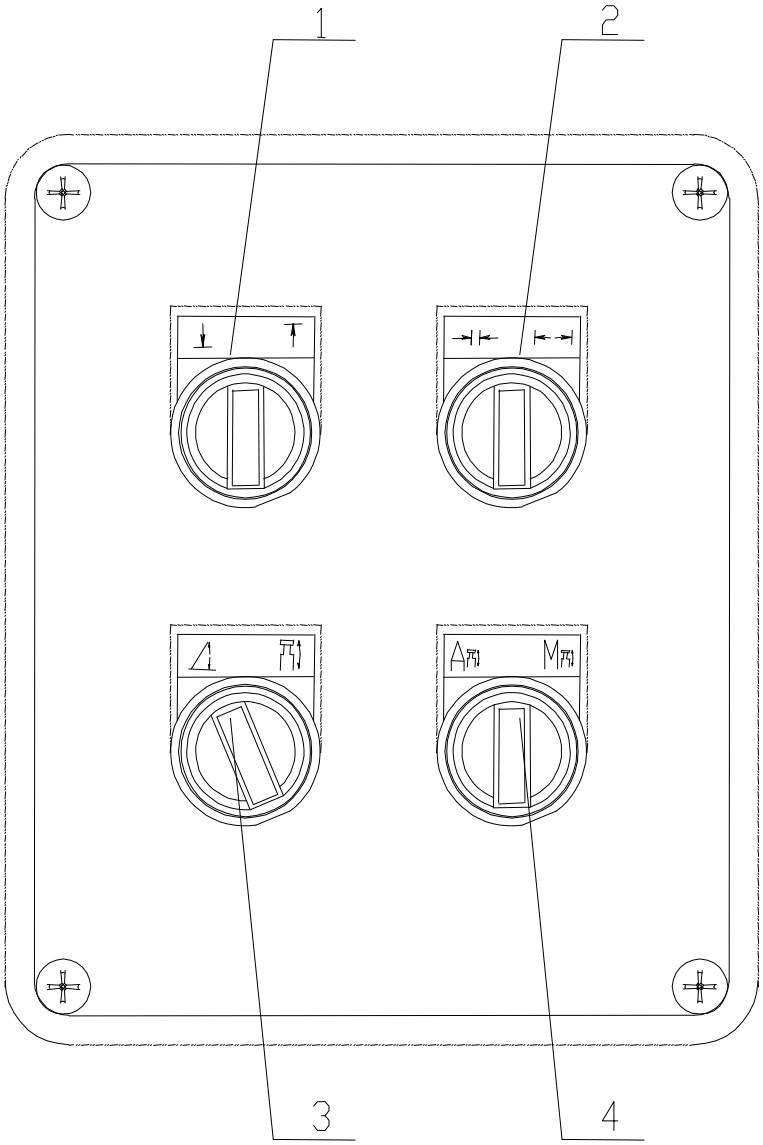

1 Switch	Pre-selection of boom pin operation
2 Switch	Pre-selection of cylinder pin operation
3 Switch	Pre-selection of derrick / telescope
4 Switch	Pre-selection of manual / automatic telescoping operation

1 Switch Pre-selection of boom pin operation

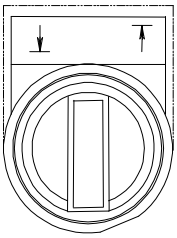

Left position: Closing the boom pin

Right position: Opening the boom pin

2 Switch Pre-selection of cylinder pin operation

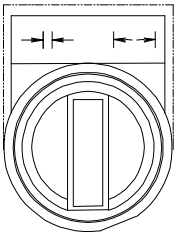

Left position: Closing the cylinder pin

Right position: Opening the cylinder pin

3 Switch Pre-selection of derrick / telescope

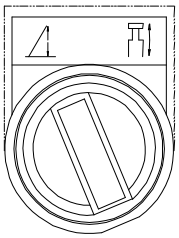

Left position: Derricking the boom

Right position: Telescoping the boom

4 Switch Pre-selection of manual / automatic telescoping operation

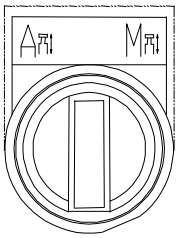

Left position: Automatic telescoping

Right position: Manual telescoping

4.1.5 Instrument console

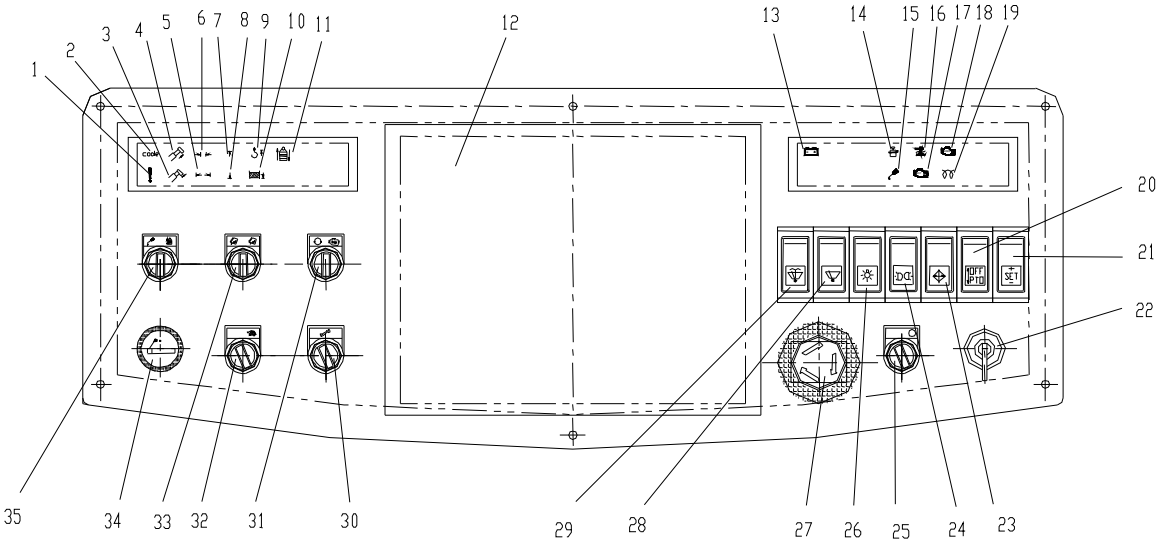

1	Control light	Boom pin operational
2	Control light	Boom code
3	Control light	Cylinder pin beyond its target hole
4	Control light	Cylinder pin not reaching its target hole
5	Control light	Telescopic cylinder locked
6	Control light	Telescopic cylinder unlocked
7	Control light	Boom pinned
8	Control light	Boom unpinned
9	Warning light	Main / auxiliary winch approaching upper limit
10	Warning light	Main / auxiliary winch approaching lower limit
11	Control light	Power of counterweight remote control box
12	Load moment limiter	
13	Warning light	Charge monitoring
14	Warning light	Engine cooling water level too low
15	Warning light	Lubricant level too low
16	Warning light	The 5th outrigger pressure too high
17	Warning light	Too much water in fuel
18	Warning light	Engine defects
19	Control light	Diesel engine preheating system
20	Switch	PTO
21	Switch	RPM setting
22	Ignition starter switch	
23	Switch	Oil cooler
24	Switch	Corner marker lights and working lights on boom head
25	Battery master switch	
26	Switch	Working lights
27	Switch	Emergency off
28	Switch	Window wiper front window
29	Button	Window washer system front window
30	Bypass key switch	
31	Switch	Supplying hydraulic oil / engine fault diagnosis
32	Switch	Slow gear
33	Switch	Tilting operator’s cab
34	Cigarette lighter	
35	Switch	Central lubricating system / Extending or retracting counterweight cylinders

1 Control light Boom pin operational

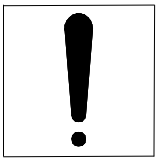

Illuminates:

It is permitted to close the boom pin.

Do not close the boom pin until the control light lights up.

2 Control light Boom code

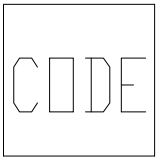

The numbers that the control light flashes every interval indicate the corresponding telescopic section the telescopic cylinder in.

3 Control light Cylinder pin beyond its target hole

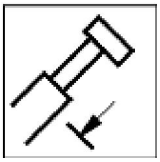

Illuminates:

The cylinder pin is beyond its target hole.

Retract the cylinder a little to align the cylinder pin with its target hole.

4 Control light Cylinder pin not reaching its target hole

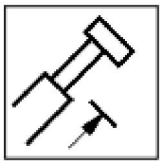

Illuminates:

The cylinder pin does not reach its target hole.

Extend the cylinder a little to align the cylinder pin with its target hole.

Note:

If the cylinder pin is aligned with its target hole, the control lights 3 and 4 will light up simultaneously.

Do not operate the cylinder pin until both control lights 3 and 4 light up.

5 Control light Telescopic cylinder locked

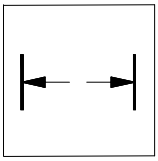

Illuminates:

The telescopic cylinder is locked with the telescopic boom.

6 Control light Telescopic cylinder unlocked

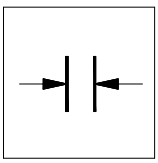

Illuminates:

The telescopic cylinder is unlocked with the telescopic boom.

7 Control light Boom pinned

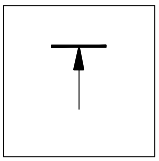

Illuminates:

The telescopic section is pinned.

8 Control light Boom unpinned

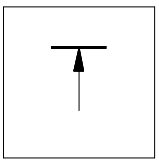

Illuminates:

The telescopic section is unpinned.

9 Warning light Main / auxiliary winch approaching upper limit

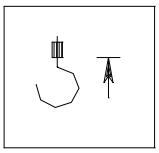

Illuminates:
Main / auxiliary winch approaches upper limit.

10 Warning light Main / auxiliary winch approaching lower limit

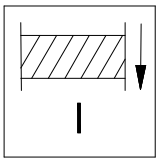

Illuminates:

Main / auxiliary winch approaches lower limit.

11 Control light Power of counterweight remote control box

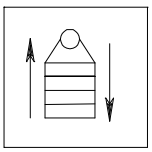

Illuminates:

The counterweight power switch is activated.

Counterweight can be operated via the remote control box.

12 Load moment limiter

Load moment limiter is a computer system for controlling and monitoring mobile crane. It can precisely check whether the crane is in safe working conditions and display some basic parameters, such as boom length, boom angle, working radius, rated lifting capacity etc., on the LCD.

13 Warning light Charge monitoring

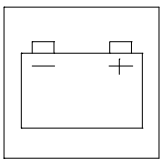

Illuminates:

Ignition starter switch is turned to the 1st position.

Extinguishes after enging starting:

The battery is charged.

Illuminates after enging starting:

Charge defects. Rectify at once.

14 Warning light Engine cooling water level too low

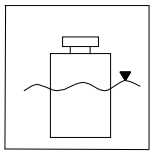

Illuminates:

Engine cooling water level is too low.

15 Warning light Lubricant level too low

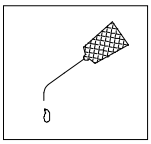

Illuminates:

The lithium base grease level in central lubricating system is too low.

Check it at once and fill lubricating grease if necessary. (It is not used in the crane of this model.)

16 Warning light The 5th outrigger pressure too high

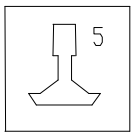

Illuminates:

The pressure of the 5th outrigger is too high.

17 Warning light Too much water in fuel

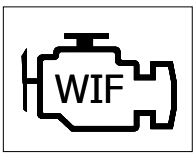

Illuminates:

Water in fuel exceeds the permissible maximum value.

18 Warning light Engine defects

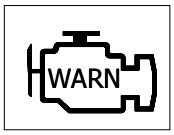

The error code of engine will be flashed out if the button (diagnostics) “Engine defects” is activated.

19 Control light Diesel engine preheating system

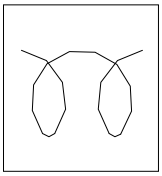

In winter (the engine coolant temperature below -4°C), preheat the engine before starting.

Turn the ignition starter switch to ON position.

Illuminates:

Preheat the engine.

Note:

If this control light flashes for 3 times, it indicates the preheating process is finished and the engine can be started.

If preheat the engine after engine is started, this control light will not light up.

If start the engine during the process of preheating or control light flashing, the preheating operation will be canceled.

20 Switch PTO

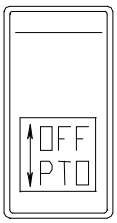

Pressed on bottom:

PTO is activated. Superstructure engine RPM is increased to 850rpm.

Pressed on top:

PTO is deactivated. Superstructure engine RPM is changed to idle speed.

21 Switch RPM setting

The PTO is activated.

Pressed on top:

The engine RPM is increased by 50rpm.

Pressed on top and hold:

Engine RPM is continuously increased to the highest one by 35rpm/s.

Pressed on bottom:

The engine RPM is decreased by 50rpm.

Pressed on bottom and hold:

Engine RPM is continuously decreased to the idle speed by 35rpm/s.

22 Ignition starter switch

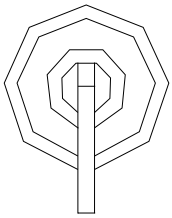

With two switch positions, in clockwise direction

Position 1:

Electrical system of engine is energized.

Position 2:

Engine starts.

Caution:

After the engine has been started, release the key to let it return to the position 1 automatically. Return key to P0 first if you want to restart the engine.

23 Switch Oil cooler

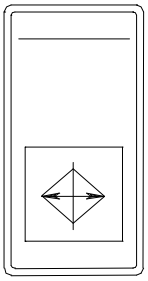

Pressed on bottom:

The fan of oil cooler begins to work.

In following situations, the fan will work automatically:

a) The left joystick is deflected to the right or left;

b) The temperature of hydraulic oil is greater than 60℃. The fan will not stop working until the oil temperature is less than 60℃ or the battery master switch is switched off.

24 Switch Corner marker lights and working lights on boom head

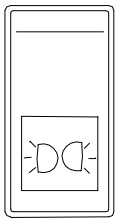

Pressed on bottom:

The corner marker lights and working lights on boom head are on.

25 Battery master switch

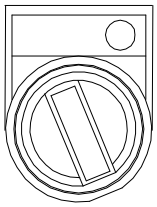

Right position:

a) The battery master switch near the battery on slewing table is switched on;

b) The switch background is lighting on.

c) The superstructure is energized.

26 Switch Working lights

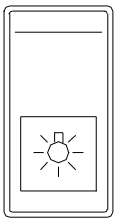

Position 1:

Switches background lighting on;

Position 2:

Switches background lighting, working lights on cab front and boom on.

27 Switch Emergency off

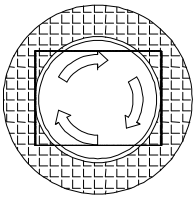

Pressed:

Cut off the output of oil line and PLC to ensure safe operation of the crane in the event of a clear emergency.

28 Switch Window wiper front window

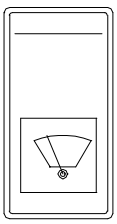

2 stages:

1 Intermittent

2 Wipe

29 Switch Window washer system front window

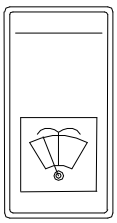

Pressed:

Switch on the windshield washer system on the front window.

30 Bypass key switch

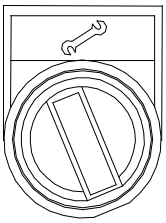

If the hook block contacts the hoisting limit switches during its upward movement, the buzzer sends out fast acoustic warning and the crane movements, such as “Spool up winches”, “Telescope boom out”, and “Derrick boom down” are cut off;

If the hook block contacts the lowering limit switch during its downward movement, the buzzer sends out fast acoustic warning and the crane movement “Reel off winches” is cut off;

If the maximum permissible load moment is exceeded, the buzzer sends out fast acoustic warning and crane movements, such as “Spool up winches”, and “Derrick boom down” are cut off;

If the current boom status is different from the target boom status, the crane movements “Derrick boom up” and “Derrick boom down” will be cut off.

The switch-off of dangerous movements can be bypassed by activating the bypass key switch on the instrument console.

Danger:

Increased accident risk when bypassing the dangerous movements!

Carry bypassing movements with maximum care and minimum speed.

Never telescope with load!

31 Switch Supplying hydraulic oil / engine fault diagnosis

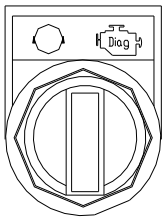

3-stage switch

Left position:

Supplying hydraulic oil to winches.

Right position:

Engine fault diagnosis. Flash code is displayed.

Released:

Return to neutral position automatically.

Note:

When it is in left position, it should always be used in conjunction with the joysticks to supply hydraulic oil to winches. Detailed operating method is as follows:

1) Supply hydraulic oil to main winch
   - Rotate the switch to the left position and deflect the right joystick forwards until the buzzer sends out slow acoustic warning;
   - Rotate the switch to the neutral position and deflect the joystick to neutral position.
2) Supply hydraulic oil to auxiliary winch
   - Rotate the switch to the left position and deflect the left joystick forwards until the buzzer sends out slow acoustic warning;
   - Rotate the switch to the neutral position and deflect the joystick to neutral position.

Do not stop supplying hydraulic oil to main / auxiliary winch until the buzzer sends out slow acoustic warning (frequency: 0.5HZ). One supplying circle is about 3 minutes.

Caution:

It is prohibited to press the deadman switches when deflecting the joysticks forwards.

If the load is suspended in the air for a period of time due to crane shutdown, supply hydraulic oil to the winches before operating the winches. The times of supplying hydraulic oil should be according to crane downtime (T):

(Preheat the machine for 15 to 30 minutes in winter)

1) If 2 hours ≤ T ≤ 6 hours, supply oil 1 circle at 1000 RPM, 1 circle for 3 mins;
2) If 6 hours ≤ T ≤ 12 hours, supply oil 2 circles at 1000 RPM, each circle for 3 mins;
3) If T ≥ 12 hours, supply oil 3 circles at 1000 RPM, each circle for 3 mins.

Note:

Rotate the switch to right position and release, ECU will send out flash code via the warning light “Engine error code displayed”. Find out the fault location according to the flash code.

Caution:

The warning light “Engine error code displayed” will illuminate all the time when the switch is kept in right position.

32 Switch Slow gear

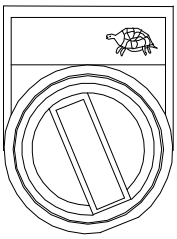

Right position:

Apply all crane movements with slow gear.

a) Crane movements “Slewing”, “Spool main winch up” and “Reef main winch off" have 1 stage.

b) Crane movements “Telescope” have 2 stages:

（1） 1 (extremely slow): intermediately deflect the right joystick to the right / left

（2） 2 (slow): fully deflect the right joystick to the right / left

c) Crane movements “Derrick” have 2 stages:

（1） 1 (extremely slow): boom length is greater than 40m

（2） 2 (slow): boom length is less than 40m

33 Switch Tilting operator’s cab

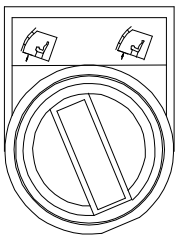

The operator’s cab can be tilted backwards for 20°.

Right position:

Tilt cab backwards;

Left position:

Tilt cab downwards.

34 Cigarette lighter

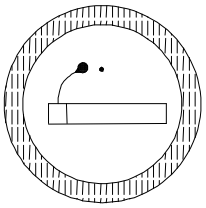

With 24V power source

It can be used as the power source of other electrical appliances.

35 Switch Central lubricating system / extending or retracting counterweight cylinder

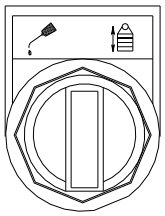

3-stage switch

Left position:

Activate the central lubricating system. Lubricating devices are energized, and the central lubricating system begins to work to lubricate every lubricating point automatically.

Right position:

Activate the counterweight remote control box.

The switch cannot return to the neutral position automatically.

Caution:

Keep the switch in neutral position when the above two functions are not needed.

4.2 Computer system

4.2.1 General

Notice!

Note:

The monitor illustrations in this chapter are only examples. The numerical values in the individual icons and tables do not necessarily match exactly to the crane.

The load moment limiter is a computer system for controlling and monitoring mobile cranes. In addition to controlling the boom telescoping via computer programs, it is also of self-diagnosis function.

The load moment limiter calculates data from the pressure sensor, length sensors, angle sensors and other monitoring devices to judge whether the crane is in safe working conditions, and displays the basic parameters, such as boom length, boom angle, working radius, rated lifting capacity etc., on the LCD.

If the actual load is greater than 90% of the rated one, the warning light lights up and buzzer sends out slow acoustic warning.

If the actual load reaches or is greater than 100% of the rated one, the warning light lights up and buzzer sends out fast acoustic warning and all dangerous crane movements are switched off. The crane can only work towards safe directions till the dangerous operation is deactivated.

The load moment limiter can prevent crane from toppling or being destructed, thus ensures crane's safe operation. However, do not rely entirely on the load moment limiter. If the rated lifting load displayed on the load moment limiter is different from the one shown in lifting capacity table, refer to the lifting capacity table.

The load moment limiter includes the following icons:

1. Auxiliary icons

   Wind speed on boom head (m/s), engine working hours, current time and date;

2. Displays

   Fuel gauge, water thermometer, engine oil pressure gauge, tachometer and main pump pressure gauge;

3. Warning light icons:

   Hoisting limit switch activated, lowering limit switch activated and engine defects;

4. Buttons

   Bypass the buzzer and function keys.

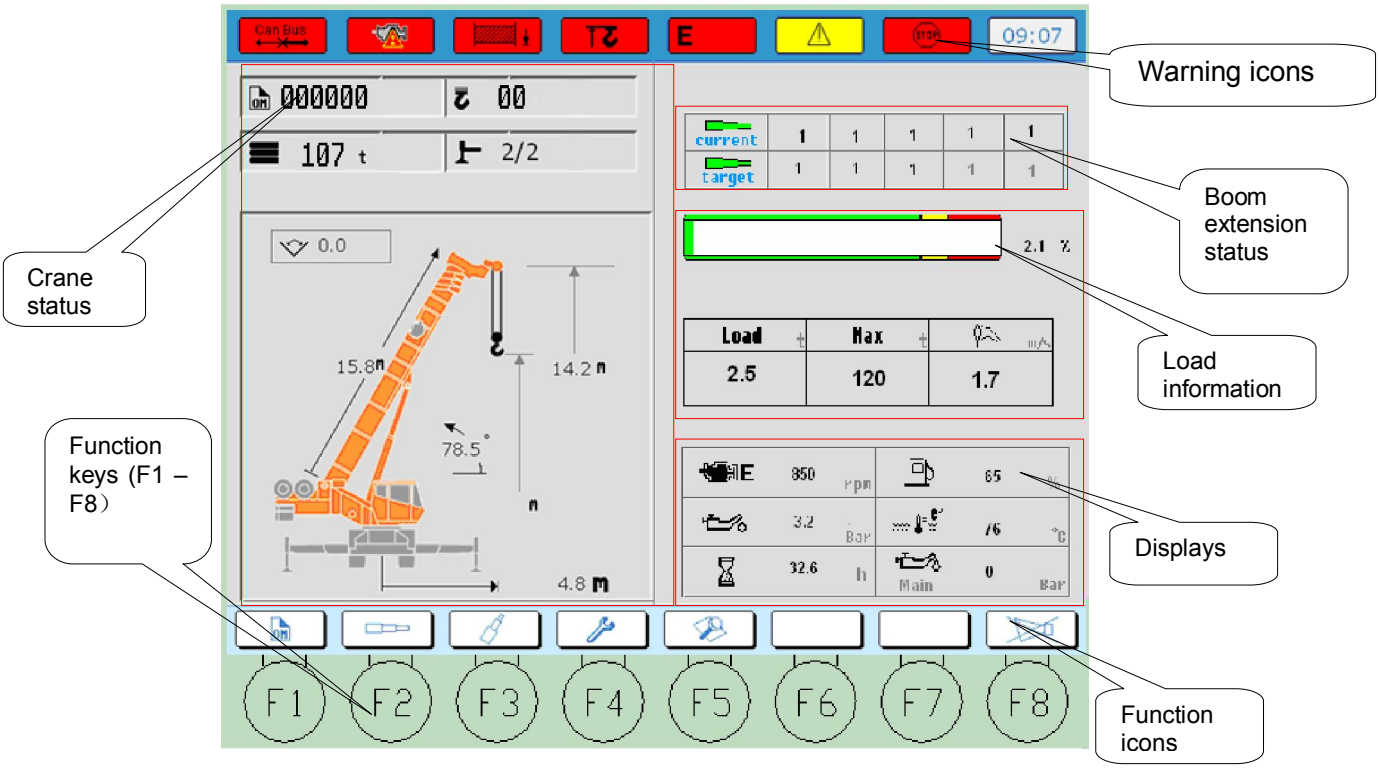

4.2.2 Programs

4.2.2.1 Switching on the computer system and performing self-test

After the computer system is switched on, the load moment limiter performs a self-test to check whether the three PLC controllers are connected. If no errors are found during the system test, the monitor displays the following screen (See Fig. 1). Shortly after that, the screen as shown in Fig.2 appears on the monitor.

Fig. 1 Self-test passed

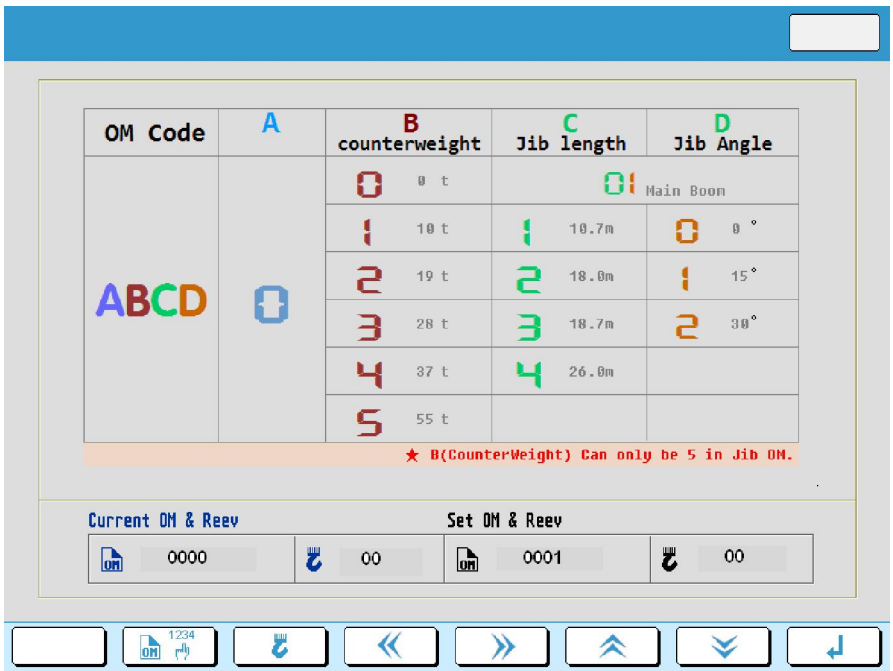

Fig. 2 OM selection

If the connection error is found during the test, the corresponding controller cannot pass the test and the monitor shows the following screen (See Fig. 3).

Fig. 3 Self-test failed

Troubleshooting:

If an error message appears on the monitor?

– Turn off the engine and ignition and rectify the errors (especially checking the connectors);

– Start again to perform self-test again.

Caution:

If an error is found during communication, the buzzer will not stop sending alarm after computer turned on. It is a normal phenomenon. Please rectify the communication fault.

After OM is selected, it switches automatically to the main screen – configuration program (See Fig. 4). Many parameters can be monitored from this screen in real time.

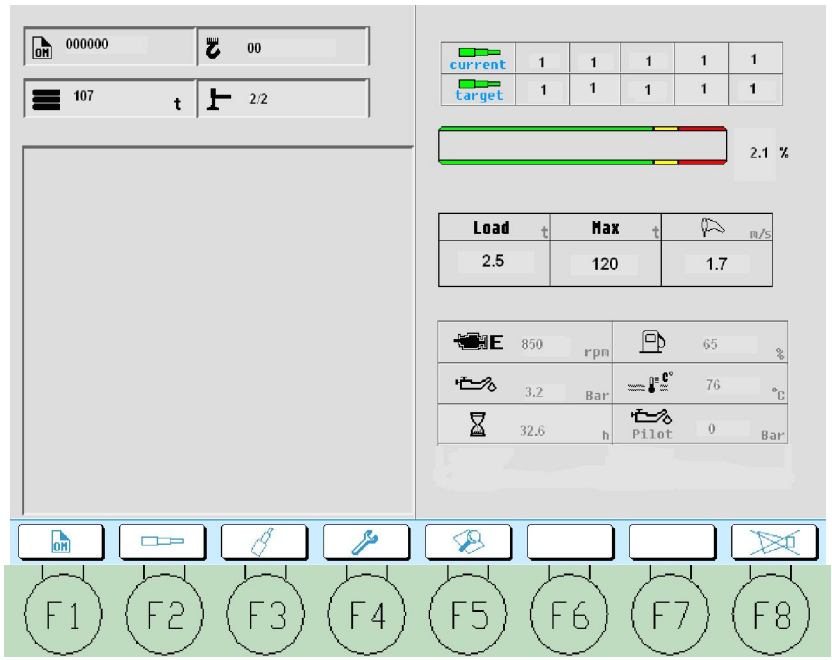

Fig. 4 Main screen – configuration program

The description of the individual programs will be described in detail.

1. Function keys

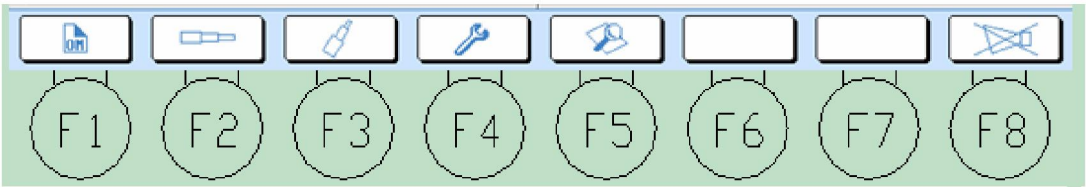

F1 OM selection

F2 Telescopic boom length

F3 Telescoping

F4 Parameter set

F5 Diagnosis

F6 Not used

F7 Not used

F8 Buzzer bypassed

Note:

If the lowering limit switch, overload protection or pipe overpressure protection is activated, press function key F8 to switch off the alarm. But the current error cannot be eliminated. The error can only be rectified manually according to actual working conditions or the hints given by the system.

2. Boom status

Display main boom length, angle, radius, height etc. If the jib is selected, it will also show the configuration of jib.

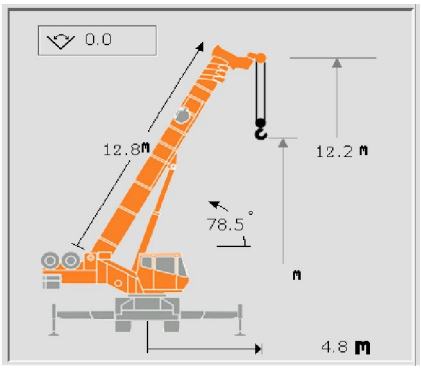

3. Display OM code, counterweight, reeving, outrigger, winch speed etc.

4. Displays

Engine RPM	Oil reserve
Engine oil pressure	Coolant temperature
Engine working hours	Pressure of main oil line

5. Load information

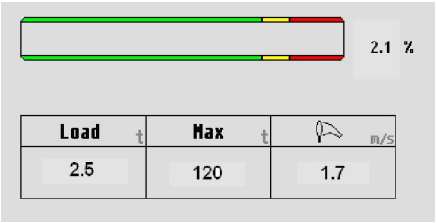

Display of load capacity bar (in percent), load weight, maximum load and wind speed.

6. Individual telescopic section extension status

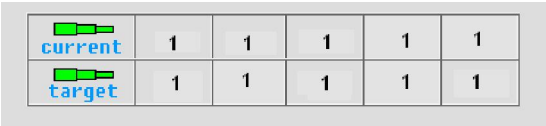

Display individual telescopic section current extension status and target extension status.

Order: Telescopic section 1 to section 5 from left to right.

7. Warning icons

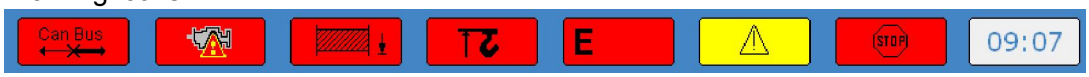

CAN bus error

Engine defects

Lowering limit switch active

Hoisting limit switch active

Error code for load moment limiter

Warning

Stop

Current time

4.2.2.2 Setting up operating mode

Set main operating mode and boom status before telescoping.

Press function key F1 (shown in Fig. 4 Main screen) to switch to Fig. 5.

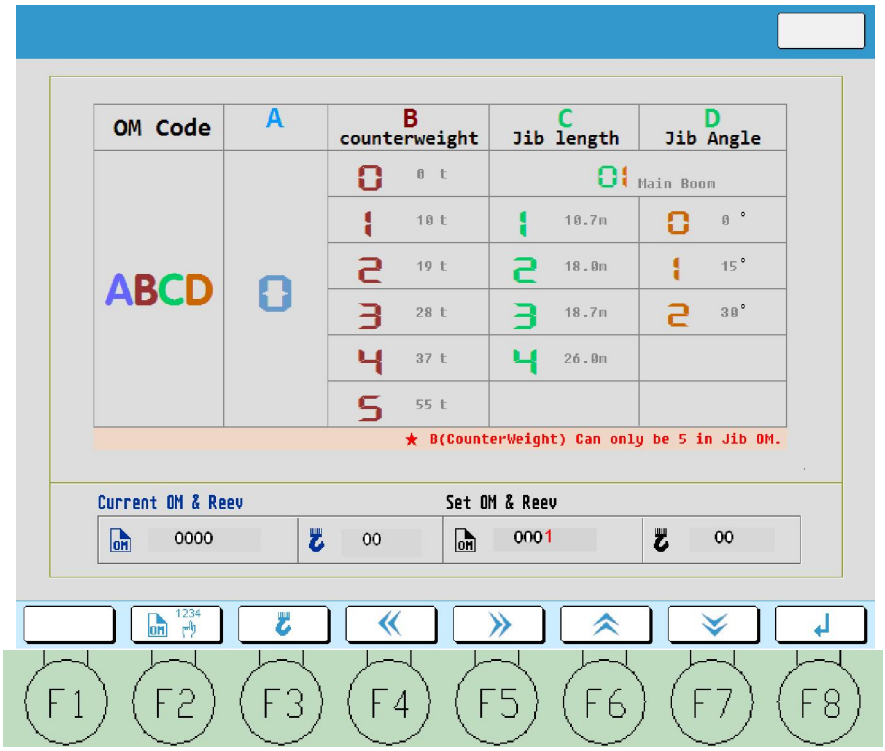

Fig.5 Main OM selection

F1: select OM

F2: select reeving number

F3: arrow left (Move to the left. The selected data is highlighted in red.)

F4: arrow right (Move to the right. The selected data is highlighted in red.)

F5: arrow up (Increase the value. Range: 0 – 9)

F6: arrow down (Decrease the value. Range: 0 – 9)

F8: exit Fig. 5 after confirmation

Press function key F2 (shown in Fig. 4 Main screen) to switch to Fig. 6.

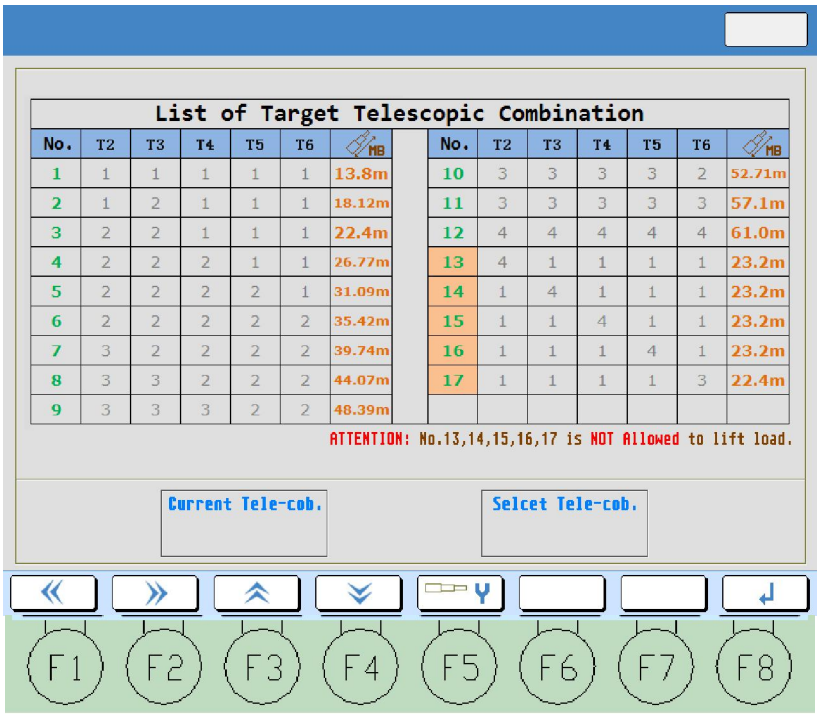

Fig.6 Individual telescopic section extension status

F1 / F2: select data (The selected data is highlighted in red.)

F3: arrow up (Increase the value. Range: 0 – 9)

F4: arrow down (Decrease the value. Range: 0 – 9)

F5: match current telescopic combination with the select one

F8: exit Fig. 6 after confirmation

Caution:

(1) Only when the set OM is valid, can the telescoping operation be carried out;

(2) The operating mode highlighted in red is not suitable for lifting load, so automatic telescoping operation is unavailable. Only manual telescoping operation is available.

4.2.2.3 Telescoping operation

Two telescoping modes: manual / automatic

Automatic telescoping is strongly recommended.

The manual telescoping can only be activated when automatic telescoping is invalid.

Boom combination illustration

Current state: 1— 2— 3— 4— 1 (42.2m)

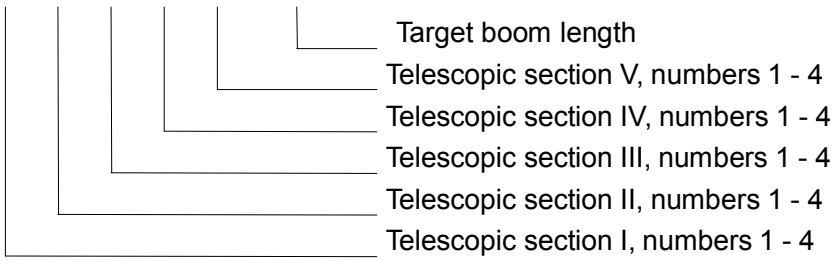

Numbers “I – V”: the corresponding telescopic section (highest number = furthest telescopic section)

Numbers “1 – 4”: Telescopic section extension status (in percent %)

1: 0% 2: 45% 3: 90% 4: 100%

a) Automatic telescoping (3 steps in total)

1) Ensure that the following prerequisites are met before operation:

– The valid operating mode has been set;

– The boom angle shouldn’t be less than 75° and the hoisting limit switch and lowering limit switch are not activated;

– Switch A has been set to “telescope”;

– Switch B is in neutral position;

– Switch C is in neutral position;

– Switch D is in neutral position;

– Icon does not appear.

If a telescoping error is detected (the above red icon illuminates), telescope the boom manually until the error is removed. For detailed information, please refer to manual telescoping operation.

As for how to check the current errors and how to clear up the stored errors, please refer to the following contents.

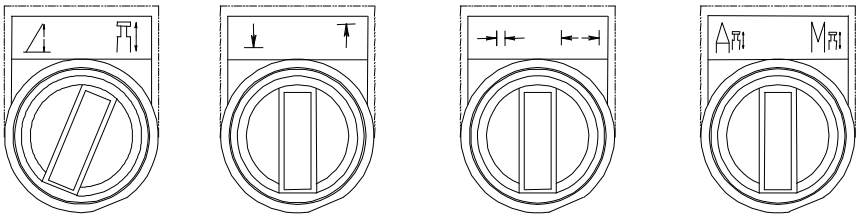

A B C D

Caution:

All prerequisites mentioned above must be met. Otherwise, the automatic telescoping operation can't be activated.

2) Ensure the current boom status is correct.

– Press function key F3 (shown in Fig. 4) to switch to Fig. 7;

– Confirm current boom status.

- If the current boom status matches with the actual one, press function key F8 for confirmation;
- If the current boom status doesn't match with the actual one, press function key F6 for modification. As for how to modify the boom status, please refer to following instructions.

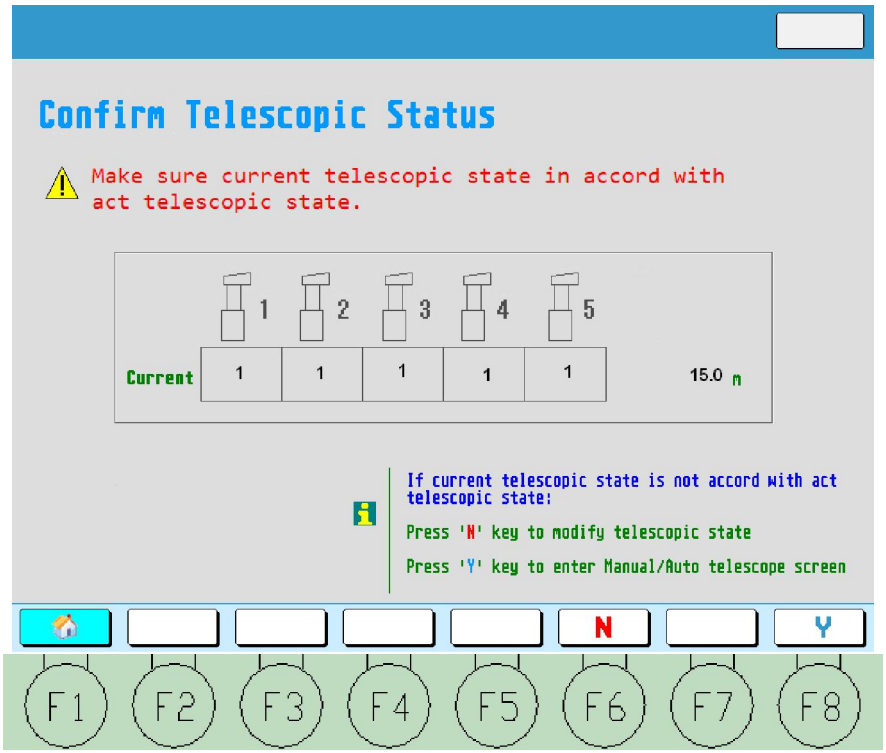

Fig.7 Boom status confirmation

Danger:

It is very import to confirm the current boom status!

Improper setting will result in incorrect telescoping movement and fatal accidents!

After current boom status is confirmed, the system will switch to Fig.8.

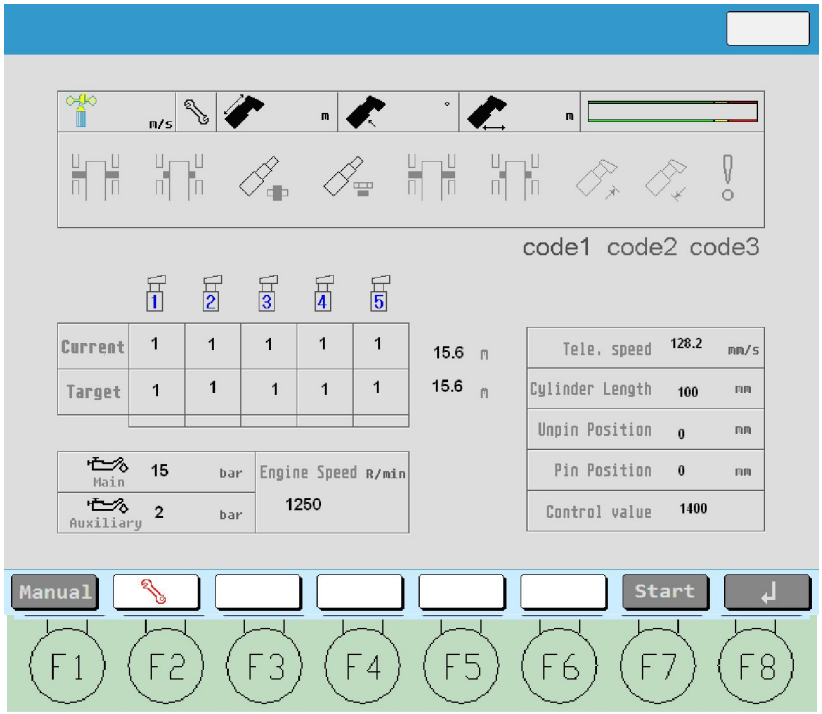

Fig. 8 Telescoping

Top display area displays the following parameters:

- Boom length
- Boom angle
- Working radius
- Wind speed

Main display area displays:

- Control light icons
- Current boom status
- Target boom status
- Information about boom pin, cylinder pin and other related information.

Control light icons (the icons on the upper side are the control lights on the dashboard)

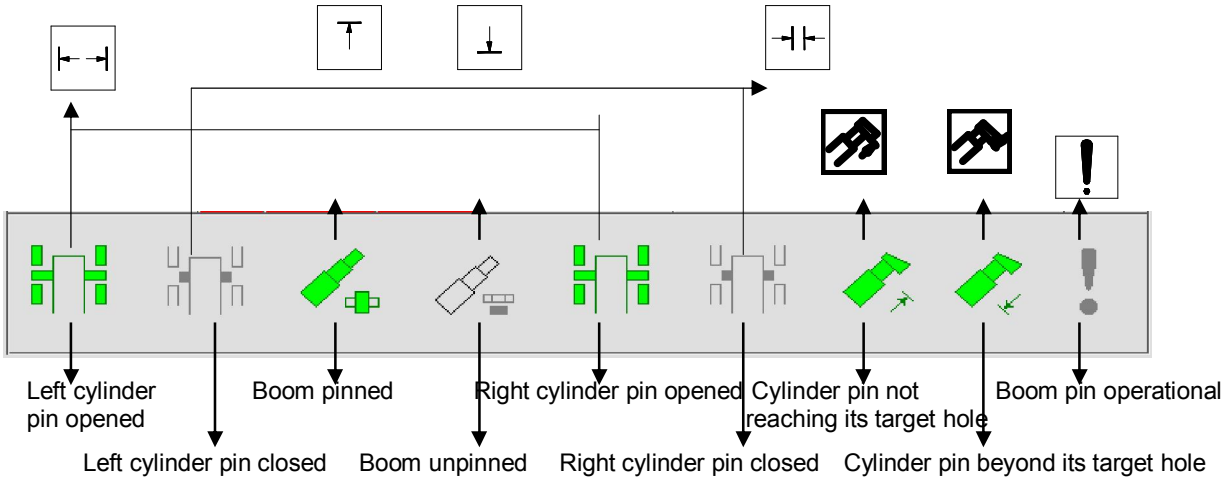

Caution:

The instrument console is also arranged with such control lights as “Cylinder pin beyond its target hole”, “Cylinder pin not reaching its target hole”, “Telescopic cylinder locked / unlocked”, “Boom pinned / unpinned”. These control lights will illuminate and extinguish together with the corresponding icons on the touch screen.

Control light “Telescopic cylinder locked / unlocked” will illuminate only when icons “Left cylinder pin opened / closed" and “Right cylinder pin opened / closed" are illuminate.

3) Telescope the boom sections automatically

– Ensure that the following prerequisites are met:

  - Keys Manual and ↵ are highlighted in green;
  - Key Start is highlighted in green.

– Press function key F7;

Result

  - Keys Manual, ↵ and Start are highlighted in grey.

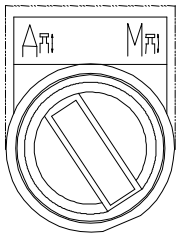

Switch D

– Set switch D (shown on the right) on left control box to left position. The telescopic boom begins to initiate automatic telescoping movement.

Note:

The keys Manual and ↵ will be highlighted in green if the telescopic sections achieve their target status.

Error calling up:

If an error is detected during telescoping, the telescoping movements will stop automatically and this icon " " will be highlighted in red.

Press F2 to switch to Fig 9.

The contents highlighted in red are the detailed error information.

Rectify the errors manually according to the instructions.

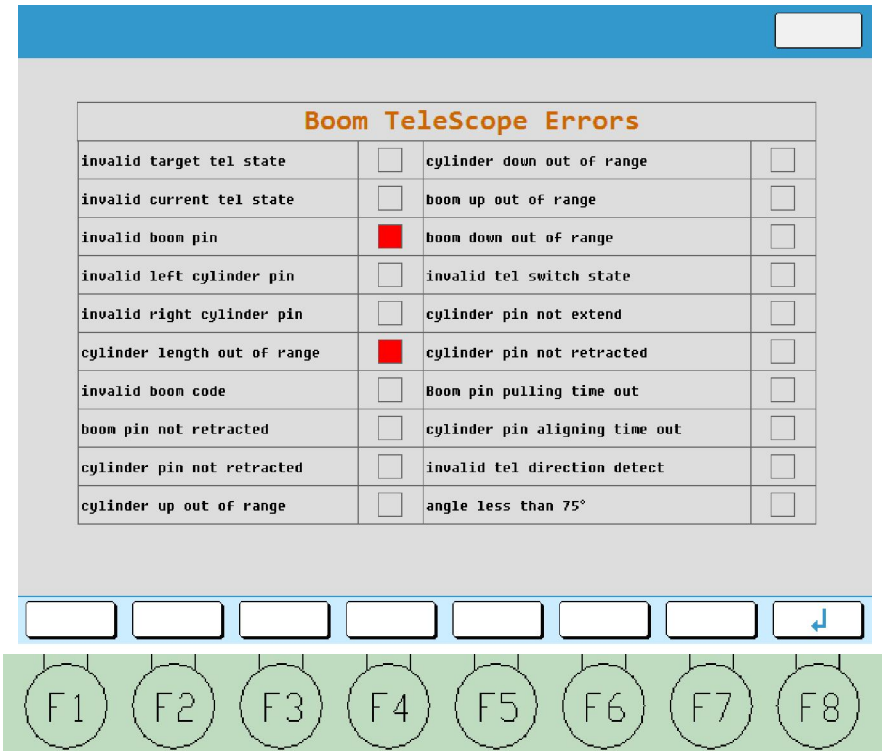

Fig. 9 Boom telescope errors

Stored error cleared up:

If the icon " " is highlighted in red, but no contents in Fig. 9 is highlighted in red, it indicates stored error exists.

Set switch D (in previous page) from neutral position to right or left position and quickly return to neutral.

Modify the current boom status:

Before switching to Fig. 8, confirm the current boom status (See Fig. 7) first.

If the displayed boom status differs from the actual one, press function key F6 to switch to Fig.10 for modification.

How to rectify the current boom status (See Fig. 10):

- Press function keys F1, F2 and F3 to select the corresponding telescopic section to be modified;
- Press function keys F5 / F6 to increase / decrease the numerical values;
- Press function key F7 "Y" to switch to Fig. 11;
- Input correct password;
- Press function key F7 "Y" for confirmation.

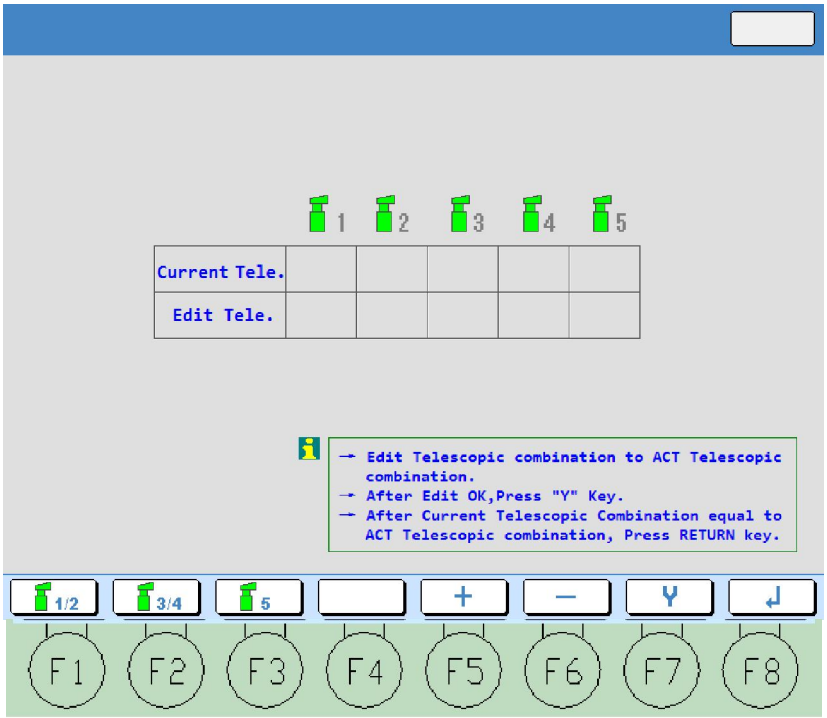

Fig. 10 Current boom status modification

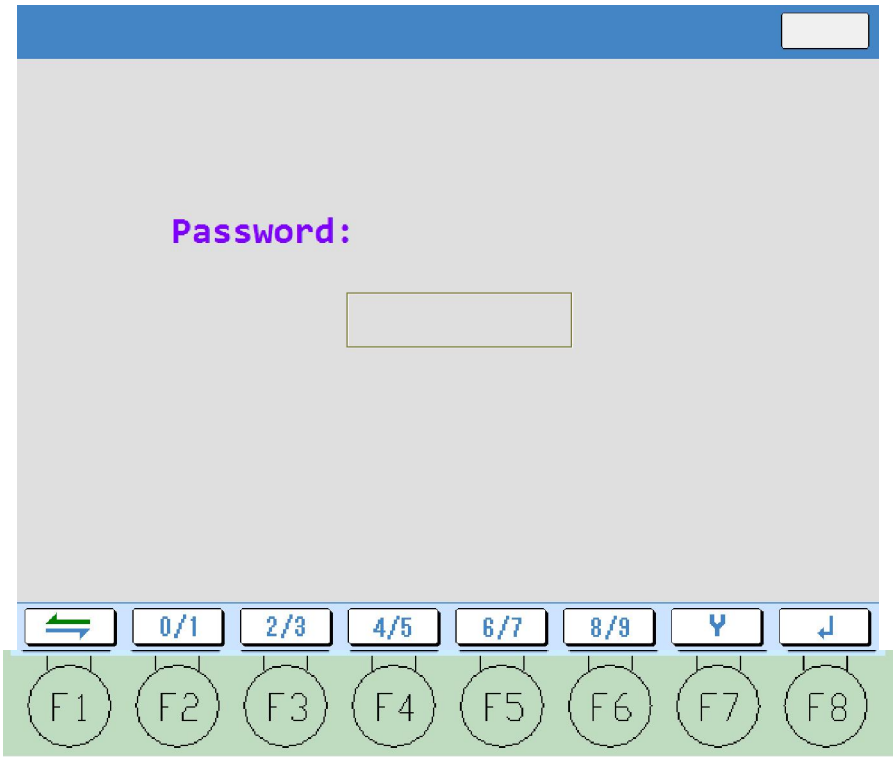

Fig. 11 Password input

Danger:

It is very important to confirm the current boom status. If the current boom status is set incorrectly, risk of fatal danger! If you need the password, please contact our technician.

b) Manual telescoping (7 steps in total)

Caution:

Because the manual telescoping is complex, it is recommended to initiate manual telescoping only when the automatic telescoping is invalid or during maintenance.

1) The valid operating mode has been set. For details, please refer to the instructions in “Automatic telescoping”;
2) Switch A has been set to right position;
3) Switch B is in neutral position;
4) Switch C is in neutral position;
5) Switch D is in neutral position;

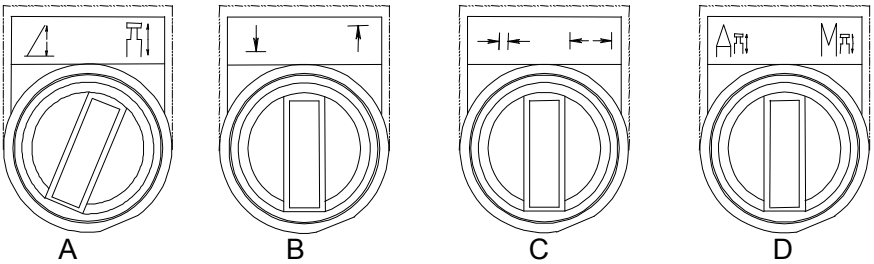

A B C D

Caution:

The boom angle is permitted to be lower than 75°. However, the operator should select a safe angle according to actual boom length to ensure safety.

6) Press function key F2 in Fig. 8 to switch to Fig. 12;
7) Telescope boom sections manually.

In Fig.12, if the above prerequisites are met, key Manual will be highlighted in green.

In that case:

– Press function key F7;
– Keys Manual and ↵ are highlighted in grey.
– Set switch D to right position;
– Move the right joystick;
– Set switches B and C to required position to telescope boom sections manually.

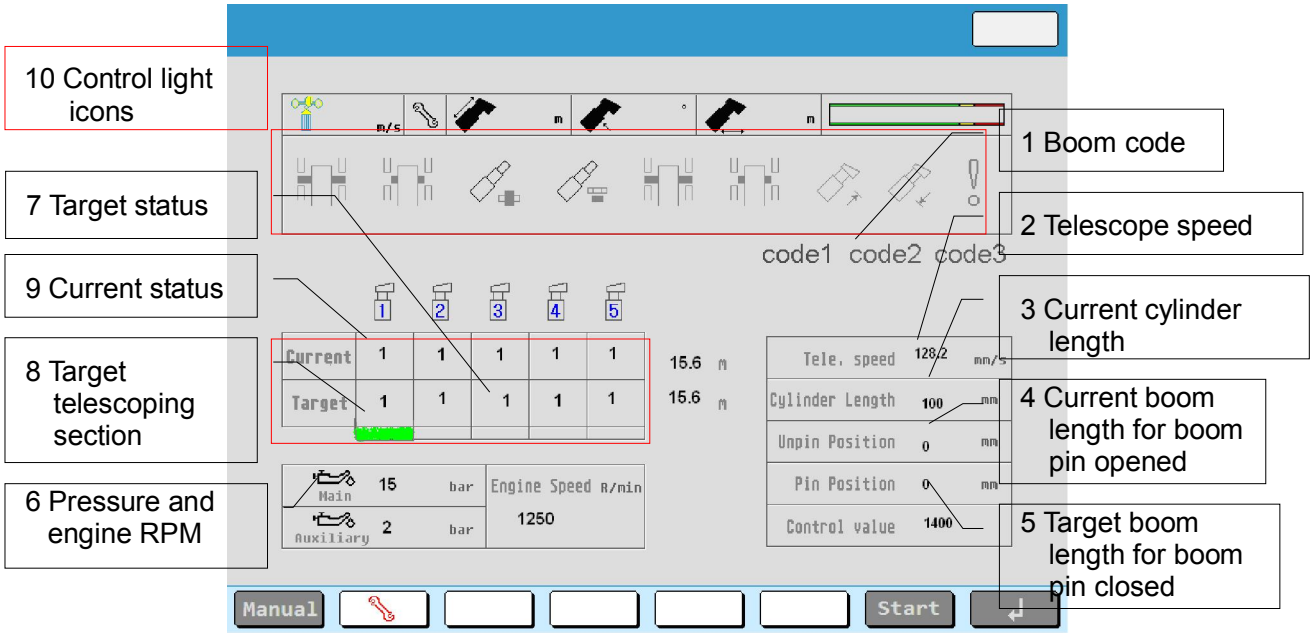

Fig.12 Boom status during manual telescoping

Observe the following instructions before carrying out manual telescoping operation:

1) Lock and unlock telescopic cylinder

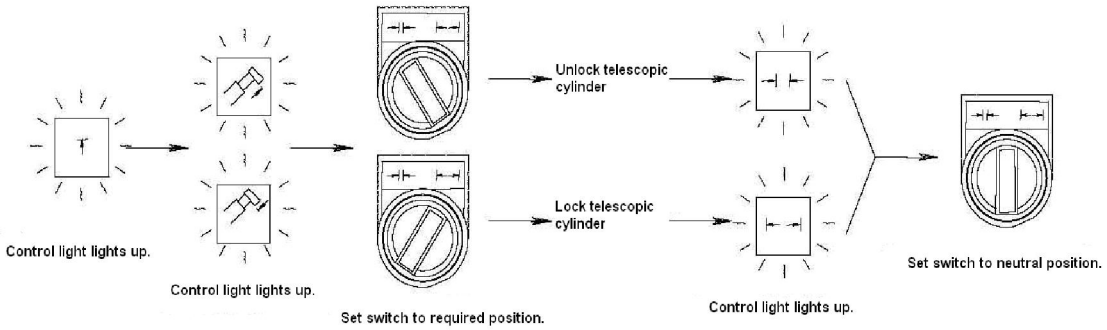

Danger:

Do not unlock the cylinder until the icons “Left cylinder pin opened” and “Right cylinder pin opened” light up. Otherwise, risk of serious damage!

2) Pin the telescopic section

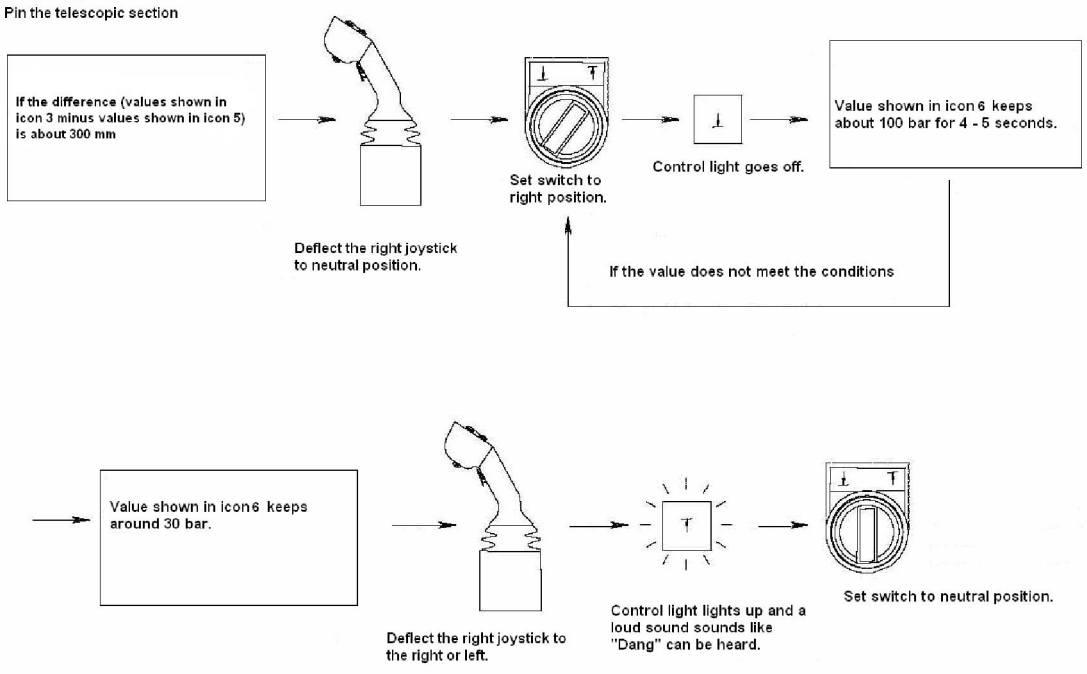

Caution:

The movement “Telescope boom out / in” must be initiated slowly if boom pin is released.

It is recommended to set slow gear switch (shown on right) to right position and slowly telescope the boom in / out to prevent the boom pin beyond its target pin hole.

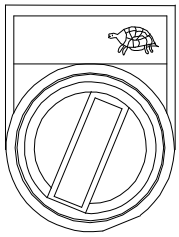

3) Unpin the telescopic section

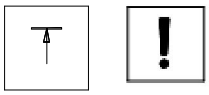

Caution:

Ensure the cylinder is locked (the above 2 control lights all light up) before unpinning the telescopic sections.

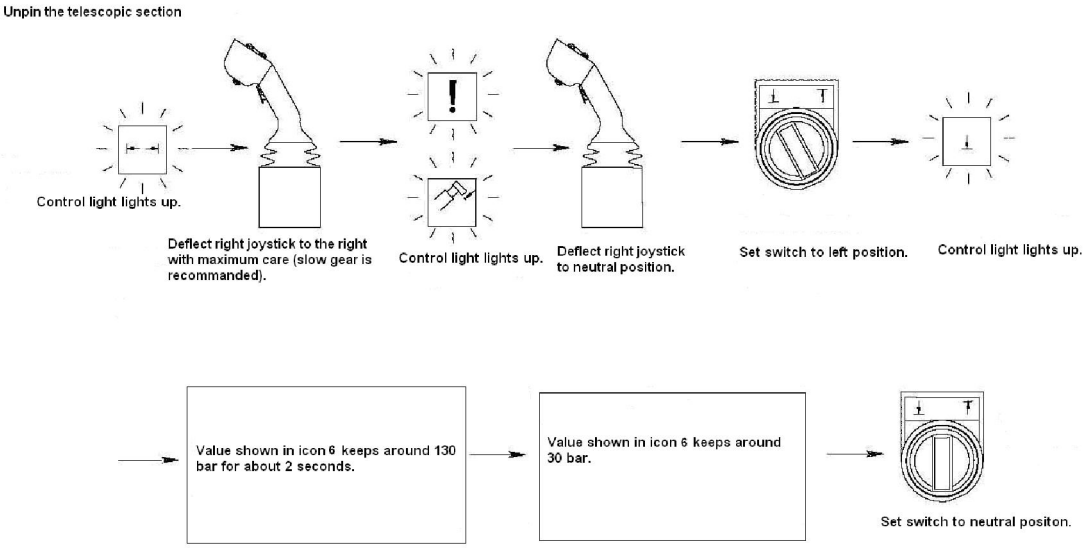

Troubleshooting

If icon “Boom pinned” goes out, but icon “Boom unpinned” does not light up and the value shown on pressure gauge keeps about 130 bar.

– Stop closing the boom pin;

– Release boom pin till control light “Boom pinned” lights up;

– Close the boom pin again.

Caution:

The boom must be telescoped in slowly with a large boom angle (slow gear is recommended) if the boom section is unpinned.

Icon "Boom operational” must be lighting up during boom telescoped-in process.

Increase telescoping speed after the telescopic cylinder retracts for a certain length.

Caution:

In automatic telescoping operation, check the icon "Boom operational” for illuminating. If not, grease the boom sections.

4) Limitations for manual telescoping operation

The movement “Extend the telescopic cylinder” will be switched off automatically to prevent the telescopic cylinder from being damaged if following prerequisites are met:

– All telescopic sections are telescoped in completely;

– Telescopic cylinder is unlocked;

– Telescopic cylinder is in the tail of telescopic section IV;

– Icons “Cylinder pin beyond its target hole” and “Boom pin operational” light up.

In this case, only the telescopic section IV can be telescoped in.

Activate the bypass key switch to release this limitation.

Caution:

Do not press and hold the bypass key switch for a long time with other tools. Otherwise, risk of inestimable loss.

5) Methods for identifying which boom section is carrying out movement

– **Method 1**

The lighted boom codes show that the corresponding telescopic sections will carry out movements.

Control light “Boom code" lights up: 1

Control light “Boom code" goes out: 0

Number of telescopic section = “Code 1” * 1 + “Code 2” *2 + “Code 3” *3

For example:

If control light on Code 1 and Code 3 light up, the telescopic section IV will carry out movements.

– **Method 2**

Observe the boom code from the following area of Fig.12.

The icon of telescopic section I is highlighted in green which indicates the telescopic section I is to carry out relevant movements.

– **Method 3**

The times the control light flashes every interval show that the corresponding telescopic section is carrying out movements.

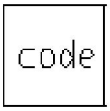

6) If the boom section is unpinned, icon 4 displays the current boom length for boom pin opened and icon 5 displays the target boom length for boom pin closed.

The length of telescopic cylinder will vary with the moving of joystick.

7) Icon 8 (Target telescoping section) indicates that the corresponding boom section highlighted in green will carry out relevant movements. For example, in Fig. 12, the highlighted section is telescopic section I. So, the telescopic section I is to carry out telescoping movements.

Points for attention during telescoping

(1) In automatic telescoping operation, the telescopic cylinder will drive the boom to retract automatically if the telescopic section is unpinned (the control light "Boom unpinned" lights up);

If the boom does not retract for a long time:

– Change automatic telescoping to manual telescoping;

– Extend the boom for 5 – 10mm with slow gear (the second stage);

– Retract it again with the slow gear (the second stage).

In this case, the operator must observe the above procedures; otherwise, risk of great impact on the boom during retracting.

(2) If the boom pin cannot be closed during the process of telescoping in the boom automatically:

– Change automatic telescoping to manual telescoping;

– Open the boom pin manually until the control light “Boom pinned” lights up;

– Change to automatic telescoping again.

If the boom pin still cannot be closed, repeat above steps.

(3) If the icon “Boom telescoping fault” lights up during automatic telescoping operation under the condition that the crane has worked for a long time:

– Change automatic telescoping to manual telescoping;

– Extend the telescopic cylinder with slow gear (the second stage) until the length of the telescopic cylinder varies.

If the icon 5 lights up during extending the cylinder:

- Retract the telescopic cylinder till both the control light 3 (Cylinder pin beyond its target hole) and control light 4 (Cylinder pin not reaching its target hole) all light up;

– Change to automatic telescoping again.

4.3 Starting up the crane

4.3.1 Checks before starting up

Ensure that the following prerequisites are met before starting up:

a) Checking the engine oil level

1) The machine has been leveled;
2) Pull out the dipstick and clean it;
3) Re-insert it into oil and pull out again;
4) Check whether the oil level is between MIN. and MAX. markings.

Warning:

If the oil level is lower than the Min. marking, fill oil. Otherwise, the engine will be damaged seriously!

b) Checking oil level in hydraulic fluid reservoir

The oil level in hydraulic fluid reservoir must be between MIN. and MAX markings.

c) Checking the fuel reserve

The fuel reserve is displayed on the bottom part of load moment limiter screen. “1’ represents fuel reserve of 100% and “0” represents fuel reserve of 0%.

Caution:

Deaerate the fuel system before adding fuel.

If the fuel tank has been run dry, always deaerate the whole fuel system.

Do not run the fuel tank dry!

d) Checking the cooling water level

If the cooling water level is too low, the warning light “ ” on the instrument console in operator’s cab will light up.

The coolant used in engine is antifreeze and antirust fluid. Add antifreeze fluid in different grades of freezing point according to different ambient temperature (Generally speaking, the antifreeze fluid grade is -5℃ in the condition of new product leaving the factory. In winter, the antifreeze fluid grade is -25℃ to -35℃). Never use water to substitute for antifreeze and antirust fluid.

Danger:

The coolant temperature should be lower than 50℃ when performing coolant level check and coolant filling. Otherwise, danger of injury due to scalding of the skin!

e) Checking central lubricating system

The grease container must be kept full with grease.

f) Checking general conditions of crane

1) Check that the crane is properly supported on a level load-bearing surface, and has been set up horizontally;
2) Check that the toothed ring of the slewing ring connection is clean and greased;

3) Check that the front and rear sides of oil cooler and A/C radiator have been cleaned and are free of blockage;
4) Ensure that there are no people or objects in the crane danger zone;
5) Make sure that the cable / rope drums and sensors are free of snow and ice;
6) Make sure that there are no loose parts on the superstructure or the telescopic boom.

Danger:

Before raising the boom, check that there are no loose parts on the boom. Otherwise, risk of accident from falling parts!

4.3.2 Engine error codes and diagnosis

This crane is equipped with Weichai engine which is of diagnostic function. If the ECU detects errors occurring in electrical system, it will:

a) Send error codes and store them in;

b) Make warning light A illuminate;

c) Activate protective device automatically.

If warning light A illuminates, it indicates the engine is defective. Stop the crane and remedy till the warning light goes off.

If warning light A does not illuminate but the error code is still displayed, it indicates stored error codes or not very serious defect which will not affect normal operation.

Under most circumstances, the protective device activated will decrease the engine RPM to guarantee the engine running with fault. However, the serious fault will lead to engine shutdown.

Calling up the error codes:

a) Diagnostic instrument or

b) Activate information button B “Engine fault diagnosis”. The error codes will be flashed out in warning light B “Engine error code displayed”. Refer to the Blink code list for detailed information.

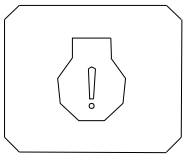

Warning light A

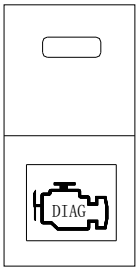

Information button B

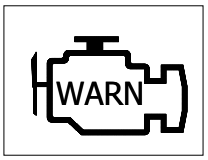

Warning light B

ECU can store 10 error codes.

A blink code consists of 3 digital numbers. Each digital number flashes every 1 second, such as 321.

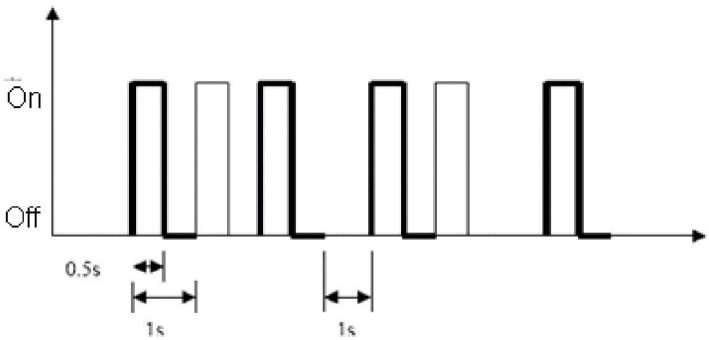

Illustration

Note:

If the information button B is active, the warning light B will illuminate.

Stored error cleared up:

– Turn information button B on and hold;

– Turn on the ignition starter switch;

– Hold the information button B for 4 - 8 seconds and release;

– Turn off the breaker close to the battery to disengage the ECU;

– Start the engine again.

Note:

Only the stored error can be cleared up. The current error cannot be cleared up.

Before clearing up the error stored in the ECU, remedy the current error first.

If the error codes cannot be cleared up, contact our specialist as soon as possible.

4.3.2.1 Blink code list

A blink code consists of 3 digital numbers. The 1st number refers to which system is defective, such as ECU, hydraulic component, sensor and actuator etc. The 2nd number refers to which component is defective. The 3rd number refers to defective path (Abbr. Dfps).

Note:

a) This manual is just aimed at the electrical fault of diesel engine national stage III. For mechanical fault, please refer to the instructions available in the manual of diesel engine national stage II;

b) The diesel engine national stage III adopts electrical controlled system, which is different from the mechanical one. If the engine is defective, special diagnostic instrument is needed;

c) Weichai diesel engine national stage III adopts Bosch common rail system (the 2nd generation) which has high requirement on oil lines (including low pressure oil line and high pressure oil line). Many faults are caused by defective oil line. However, the harness is also a main fault source;

d) The blink code is just a pre-judge to ECU internal fault. Diagnostic instrument is needed for further diagnosis.

Classification of blink codes (according to system)

	1	2	3	4	5
	Relative movements to system running	**Important sensors**	**Accessories and their functions**	**Injector & CAN message**	**External tests**
1	start relative, synchronization	fuel filter	cooling component	network manage	misfire-dection
2	start relative, components	propulsion component	air heater	Frame manager	engine test
3	power supply, main relay	air system component	ErlpCD	Frame manager	
4	Bank & Chip	cooling & lubrication	accessory button	Frame manager	
5	injector system	rail pressure monitoring	EGR (not used in EIII)	governor deviation	
6	CRS component	ECU & overrun monitoring			

Blink codes list:

System	Component	Dfps	Blink Code		
start relative	ECU Supply AD	Dfp_ADCMon	1	1	1
start relative	Synchronization	Dfp_EngMCrS1	1	1	2
start relative		Dfp_EngMCaS1	1	1	3
start relative		Dfp_EngMBackUp	1	1	4
start relative	ECU time processing unit	Dfp_TPUMon	1	1	5
start relative	ECU internal	Dfp_SOPTst	1	1	6
start relative	start relay	Dfp_StrtCDHS	1	2	1
start relative		Dfp_StrtCDLS	1	2	1
start relative	start system T15	Dfp_T50CD	1	2	2
start relative	start system T50	Dfp_T15CD	1	2	3
start relative	battery	Dfp_BattCD	1	2	4
start relative	start system	Dfp_FMTC_NonMonotonMap	1	2	5
start relative	ECU Supply	Dfp_SSpMon1	1	3	1
start relative		Dfp_SSpMon12V	1	3	1
start relative		Dfp_SSpMon2	1	3	1
start relative		Dfp_SSpMon3	1	3	1
start relative	Main Relay	Dfp_MnRly1_SCB	1	3	2
start relative		Dfp_MnRly1_SCG	1	3	2
start relative		Dfp_MRlyCD	1	3	2
CRS component	Rail pressure sensor	Dfp_RailCD	1	3	3
CRS component		Dfp_RailCDOfsTst	1	3	3
CRS component	Pressure relief valve of CRS	Dfp_PRVMon	1	3	4
CRS component	flow-measurement unit	Dfp_MeUnCD_ADC	1	3	5
CRS component		Dfp_MeUnCDNoLoad	1	3	5
CRS component		Dfp_MeUnCDSCBat	1	3	5
CRS component		Dfp_MeUnCDSCGnd	1	3	5
Cylinder1	cylinder 1 injector	Dfp_InjVlvCyl1A	1	4	1
Cylinder1		Dfp_InjVlvCyl1B	1	4	1
Cylinder2	cylinder 2 injector	Dfp_InjVlvCyl2A	1	4	2
Cylinder2		Dfp_InjVlvCyl2B	1	4	2
Cylinder3	cylinder 3 injector	Dfp_InjVlvCyl3A	1	4	3

System	Component	Dfps	Blink Code		
Cylinder3		Dfp_InjVlvCyl3B	1	4	3
Cylinder4	cylinder 4 injector	Dfp_InjVlvCyl4A	1	4	4
Cylinder4		Dfp_InjVlvCyl4B	1	4	4
Cylinder5	cylinder 5 injector	Dfp_InjVlvCyl5A	1	4	5
Cylinder5		Dfp_InjVlvCyl5B	1	4	5
Cylinder6	cylinder 6 injector	Dfp_InjVlvCyl6A	1	4	6
Cylinder6		Dfp_InjVlvCyl6B	1	4	6
Bank	Bank1 (control injectors 1, 2, 3)	Dfp_InjVlvBnk1A	1	5	1
Bank		Dfp_InjVlvBnk1B	1	5	1
Bank	Bank 2 (control injectors 4.5.6)	Dfp_InjVlvBnk2A	1	5	2
Bank		Dfp_InjVlvBnk2B	1	5	2
Chip	Chip (control fuel injection)	Dfp_InjVlvChipA	1	5	3
Chip		Dfp_InjVlvChipB	1	5	3
Injection	working injector	Dfp_InjVlvNumMinInj	1	5	4
Injection	ECU	Dfp_InjCrv_InjLim	1	5	5
important function	Fuel filter	Dfp_FlSys_WtDet	2	1	1
important function	propulsion	Dfp_APP1	2	2	1
important function	propulsion	Dfp_APP2	2	2	1
important function	propulsion	Dfp_ConvCD	2	2	2
important function	propulsion	Dfp_BrkCD	2	2	3
important function	propulsion	Dfp_AccPedPlausBrk	2	2	5
important function	Propulsion	Dfp_EngPrtOvrSpd	2	2	6
important function	Propulsion	Dfp_GearbxIncMax	2	2	7
important function	propulsion	Dfp_CoVMDCSh	2	2	8
important function	Air system	Dfp_BPSCD	2	3	1
important function	Air system	Dfp_APSCD	2	3	2
important function	Air system	Dfp_IATSCD	2	3	3
important function	Cooling system	Dfp_CTSCD	2	4	1
important function	Cooling system	Dfp_CTSCDOvrTemp	2	4	2
important function	Cooling system	Dfp_OPSCD	2	4	3
important function	Cooling system	Dfp_OPSCD1	2	4	3
important function	Cooling system	Dfp_OTSCD	2	4	4

System	Component	Dfps	Blink Code		
important function	Cooling system	Dfp_OTSCD1	2	4	4
important function	Cooling system	Dfp_Clg_AbsTst	2	4	5
important function		Dfp_Clg_DynTst	2	4	5
Rail Pressure Monitoring	Rail Meun High / low pressure oil line leakage	Dfp_RailMeUn0	2	5	1
Rail Pressure Monitoring		Dfp_RailMeUn1	2	5	2
Rail Pressure Monitoring		Dfp_RailMeUn3	2	5	3
Rail Pressure Monitoring		Dfp_RailMeUn4	2	5	3
Rail Pressure Monitoring		Dfp_RailMeUn12	2	5	4
Rail Pressure Monitoring		Dfp_RailMeUn2	2	5	4
Rail Pressure Monitoring		Dfp_RailMeUn7	2	5	5
Rail Pressure Monitoring		Dfp_RailMeUn10	2	5	6
Rail Pressure Monitoring		Dfp_RailMeUn6	2	5	7
start relative	ECU Recovery	Dfp_HWEMonRcyLocked	2	6	1
start relative	ECU Recovery	Dfp_HWEMonRcySuppressed	2	6	1
start relative	ECU Recovery	Dfp_HWEMonRcyVisible	2	6	1
start relative	OvrMon	Dfp_OvRMon	2	6	2
start relative		Dfp_OvRMonSigA	2	6	2
start relative	ECU Monitoring	Dfp_HWEMonCom	2	6	3
start relative	ECU Monitoring	Dfp_HWEMonUMaxSupply	2	6	3
start relative	ECU Monitoring	Dfp_HWEMonUMinSupply	2	6	3
start relative	ECU Monitoring	Dfp_Montr	2	6	4
start relative	ECU Monitoring	Dfp_HWEMonEEPROM	2	6	5
Accessory	Exhaust Flap	Dfp_ExFICD_Max	3	1	1
Accessory		Dfp_ExFICD_Min	3	1	1
Accessory		Dfp_ExFICD_SigNpl	3	1	1
Accessory	A/C compressor relay	Dfp_ACCDCmpr	3	1	3
Accessory	glow system	Dfp_ArHt1	3	2	1
Accessory		Dfp_AirHtStickOn	3	2	2
Accessory		Dfp_AirHt_Test1	3	2	3
Accessory		Dfp_AirHt_Test2	3	2	3
important function	propulsion	Dfp_VSSCD1	3	2	4
important function		Dfp_VSSCD2	3	2	4
important function		Dfp_VSSCD3	3	2	4

System	Component	Dfps	Blink Code		
Accessory	Switch	Dfp_MSSCD	3	2	7
Accessory	lamp	Dfp_SysLamp	3	3	1
Accessory	cold start lamp	Dfp_CSLPCD	3	3	2
Accessory	warning lamp	Dfp_Wrn	3	3	2
Accessory	water in fuel lever sensor	Dfp_Gen1	3	3	4
Accessory	warning lamp	Dfp_Gen3	3	3	4
Accessory	Tempomat switch	Dfp_MFLvCrCtlMode	3	4	1
Accessory	Exhaust brake switch	Dfp_EBSwPreSelPlaus	3	4	2
Accessory	chassis ignition starter switch	Dfp_ECBtCD	3	4	3
external test	external test	Dfp_CmbChbMisfire1	5	1	1
external test		Dfp_CmbChbMisfire2	5	1	2
external test		Dfp_CmbChbMisfire3	5	1	3
external test	external test	Dfp_CmbChbMisfireMul	5	1	4
external test	external test	Dfp_ComprTst	5	2	1
external test		Dfp_HpTst	5	2	2
external test		Dfp_RunUpTst	5	2	3
external test	external test	Dfp_CmbChbMisfire4	5	3	1
external test		Dfp_CmbChbMisfire5	5	3	2
external test		Dfp_CmbChbMisfire6	5	3	3
external test	external test	Dfp_ShOffTst	5	3	4
start relative	Synconisation	Dfp_EngMOfsCaSCrS	5	4	1

Note:

If “ECU error” is flashed out, please contact with our after-sales department.

Blink code with CAN bus assembled (Not used in this crane temporarily)

System	Component	Dfps	Blink Code		
Accessory		Dfp_ACCDSwtin	3	1	3
CAN message	Network manage	Dfp_NetMngCANAOff	4	1	1
CAN message	Network manage	Dfp_NetMngCANBOff	4	1	2
CAN message	Network manage	Dfp_NetMngCANCOff	4	1	3
CAN message	Communication Monitoring	Dfp_WdCom	4	1	4
CAN message	Receive timeout	Dfp_FrmMngTOEngGsFlowRt	4	1	5
CAN message	Receive timeout	Dfp_FrmMngTOHRVD	4	1	6
CAN message	Receive timeout	Dfp_FrmMngTOTimeDate	4	1	7
CAN message		Dfp_FrmMngTOTSC1AE	4	2	1
CAN message		Dfp_FrmMngTOTSC1AR	4	2	1
CAN message		Dfp_FrmMngTOTSC1DE	4	2	2
CAN message		Dfp_FrmMngTOTSC1DR	4	2	2
CAN message		Dfp_FrmMngTOTSC1PE	4	2	3
CAN message		Dfp_FrmMngTOTSC1TE	4	2	4
CAN message		Dfp_FrmMngTOTSC1TR	4	2	4
CAN message		Dfp_FrmMngTOTSC1VE	4	2	5
CAN message		Dfp_FrmMngTOTSC1VR	4	2	5
CAN message	Communication Monitoring	Dfp_FrmMngTxTO	4	3	1
CAN message	Receive timeout	Dfp_FrmMngRxEngTmp2Sens	4	3	2
CAN message	Receive timeout	Dfp_FrmMngEngGsFlRtHtr	4	3	3
CAN message	Receive timeout-no used	Dfp_FrmMngTODashDspl	4	3	4
CAN message		Dfp_FrmMngTOWSI	4	3	5
CAN message	Receive timeout	Dfp_FrmMngTOEBC1	4	4	1
CAN message	Receive timeout	Dfp_FrmMngTOERC1DR	4	4	2
CAN message	Receive timeout	Dfp_FrmMngTOETC1	4	4	3
CAN message	Receive timeout-no used	Dfp_FrmMngTORxAMCON	4	4	4
CAN message	Receive timeout-no used	Dfp_FrmMngTORxCCVS	4	4	5
CAN message	Receive timeout	Dfp_FrmMngTOTCO1	4	4	6
CAN message	Receive timeout	Dfp_FrmMngTORxEngTemp2	4	5	1
CAN message	Receive timeout	Dfp_FrmMngTOTF	4	5	2

Functions, sensors and actuators not used in National Stage III engine temporarily:

System	Component	Dfps	Blink Code		
important function	Fuel Filter	Dfp_FlSys_FltFoul	2	1	2
important function	Fuel Filter	Dfp_FlFCD_FltFoulMax	2	1	3
important function	Fuel Filter	Dfp_FlFCD_FltFoulMin	2	1	3
important function	Fuel Filter	Dfp_FlFCD_FltFoulNpl	2	1	3
important function	Fuel Filter	Dfp_FlFCD_WtLvlMax	2	1	4
important function	Fuel Filter	Dfp_FlFCD_WtLvlMin	2	1	4
important function	Fuel system	Dfp_FTSCD	2	1	5
important function	Fuel Filter	Dfp_FlFCD_Htg	2	1	6
important function	Air system	Dfp_AFSCD_AirTemp	2	3	4
important function	Air system	Dfp_AFSCD_PlOffsDrft	2	3	4
important function	Air system	Dfp_AFSCD_PlSetyDrft	2	3	4
important function	Air system	Dfp_AFSCD_SRCAirm	2	3	4
important function	Air system	Dfp_EATSCD	2	3	5
important function	Air system	Dfp_EATSCDBET	2	3	5
important function	Air system	Dfp_EATSCDClgZn	2	3	5
important function	Air system	Dfp_EATSCDInAir	2	3	5
important function	Cooling system	Dfp_CLSCD	2	4	6
important function	Cooling system	Dfp_OLSCD	2	4	7
important function	Air system	Dfp_IAHSCD	2	3	6
accessory		Dfp_FanCD	3	1	2
accessory		Dfp_FanCD2	3	1	2
accessory		Dfp_FanCDEval	3	1	2
accessory		Dfp_ASLLCD	3	3	3
accessory		Dfp_MIL	3	3	3
accessory		Dfp_Gen2	3	3	4
accessory		Dfp_EGPpCDP3	3	4	5
not used		Dfp_CABCD	2	2	4
not used		Dfp_CRERCD_Actr	3	2	5
not used		Dfp_PSPCD_Actr	3	2	6
not used	PWM-no used	Dfp_BPACD_ADC	3	4	4
not used	PWM-no used	Dfp_BPACD_Max	3	4	4

System	Component	Dfps	Blink Code		
not used	PWM-no used	Dfp_BPACD_Min	3	4	4
not used	PWM-no used	Dfp_BPACD_SigNpl	3	4	4
not used	EGR	Dfp_ECBCD	3	5	1
not used	EGR	Dfp_EGRCD_Max	3	5	1
not used	EGR	Dfp_EGRCD_Min	3	5	1
not used	EGR	Dfp_EGRCD_SigNpl	3	5	1
not used	Air system-no used	Dfp_TVACD_Max	3	5	2
not used	Air system-no used	Dfp_TVACD_Min	3	5	2
not used	Air system-no used	Dfp_TVACD_SigNpl	3	5	2
not used	Governor deviation-not used	Dfp_AirCtlGvnrDvtMax	4	5	3
not used	Governor deviation-not used	Dfp_AirCtlGvnrDvtMin	4	5	3
not used	Governor deviation-not used	Dfp_PCRGvnrDvtMax	4	5	4
not used	Governor deviation-not used	Dfp_PCRGvnrDvtMin	4	5	4
not used	external test	Dfp_VarMngCodDs	5	2	4

4.3.3 Starting the engine

a) Switching on battery master switch

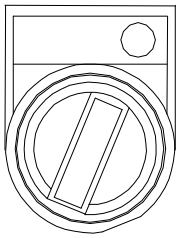

Right position:

– The battery master switch near the battery on slewing table is switched on;

– The switch background lights up;

– The superstructure is energized.

b) Switching on the engine

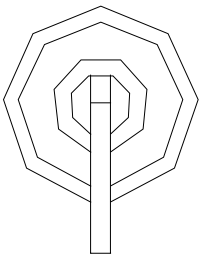

With two switch positions, in clockwise direction

Position 1:

Electrical system for engine is energized.

Position 2:

Engine starts.

Caution:

(1) After the engine has been started, release the key to let it return to the position 1 automatically. This key has the function to prevent the engine from being started repeatedly (i.e., if the engine has been started, the next engine starting will be invalid before the key is returned to the original zero position);

(2) Never run the motor for 15 seconds continuously. The motor can be operated two times per attempt with a pause of several minutes to avoid battery discharging electricity and starting motor being damaged. If the engine cannot be started after 3 attempts, have the engine defects rectified.

4.3.4 Computer system after engine start

The Main screen - Configuration program will appear on the monitor after the computer system is switched on and has passed its self-test. After the engine starts, the relevant data, such as engine working hours, date, time, oil reserve, oil pressure, coolant temperature and engine RPM etc., can be monitored via the load moment limiter screen. Check the relevant data. Once an error is detected, turn off the engine and find out the cause.

OM (operating mode) set can be performed on the Main screen - Configuration program. For detailed information, please refer to Chapter 4.2.2.

4.4 Safety devices

4.4.1 General

Every time the crane is operated, the crane operator is required to satisfy himself about the functionality of the safety systems.

Danger:

Danger of accident from defective warning and safety systems!

Operating the crane with defective warning and safety systems can lead to life-threatening accidents!

4.4.2 Support control unit

To ensure the working safety of the crane, the crane must be properly supported on a level and load-bearing ground, and be set up horizontally.

A support control unit with buttons is attached to each side of the vehicle for operating the outrigger, together with an electronic inclinometer from which the operator can observe horizontal alignment of the crane.

Caution:

The maximum permitted deviation from the horizontal position of the crane is ± 1°. Otherwise fatal accidents may be increased.

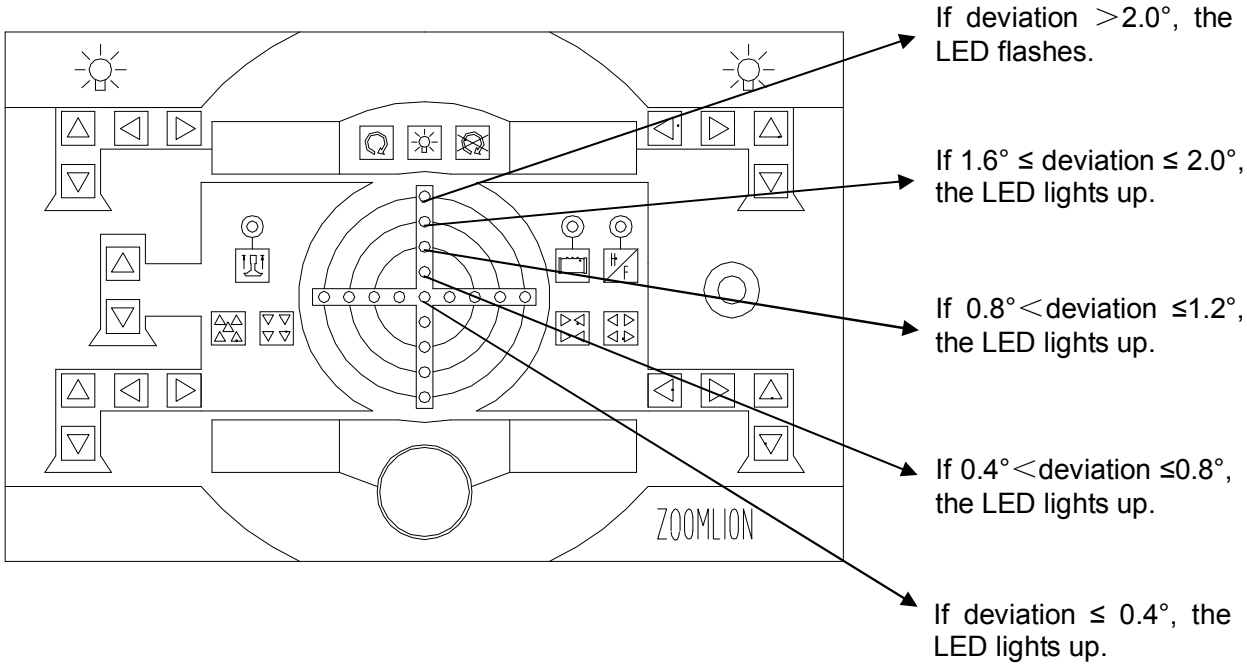

4.4.3 Load moment limiter

The load moment limiter not only is the key control device, but also is one of the most important safety devices to monitor the crane movements in real time.

If the actual load exceeds 90% of the rated one, the warning light will light up and buzzer will send out slow acoustic warning.

If the actual load reaches or exceeds 100% of the rated one, the overload warning light will light up and buzzer will send out fast acoustic warning. At this time, the load moment limiter will send out a cut-off signal. All dangerous crane movements are switched off. In this case, the crane can only work towards safe directions till the dangerous operation is deactivated.

4.4.4 Hoisting / lowering limit switch

a) Lowering limit switch

In order to prevent the wire rope from being reeled reversely after being reeled off completely, the lowering limit switches installed beside the winches will switch off the movements ”Reel off winches” if there are only 3 rope windings remaining on the winches.

In this case, the acoustic sound will be heard and only the upward movement of the hook is permitted. During commissioning and maintenance, activate the bypass key switch on the control console to release the limitation.

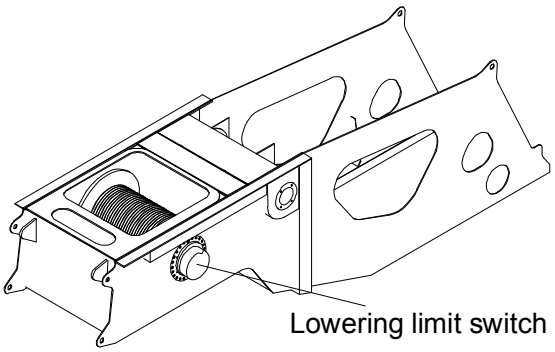

b) Hoisting limit switch

If the hook block contacts the hoisting limit switch weight during its upward movement, the hoisting limit switch is triggered and buzzer sounds. The crane movements “Spool up winches”, “Derrick main boom down” and “Telescope boom out” are switched off. At this time, only the crane movements “Reel off winches”, “Derrick main boom up” and “Telescope boom in” can be switched on. This switch-off can be bypassed when the hoisting limit switch is released.

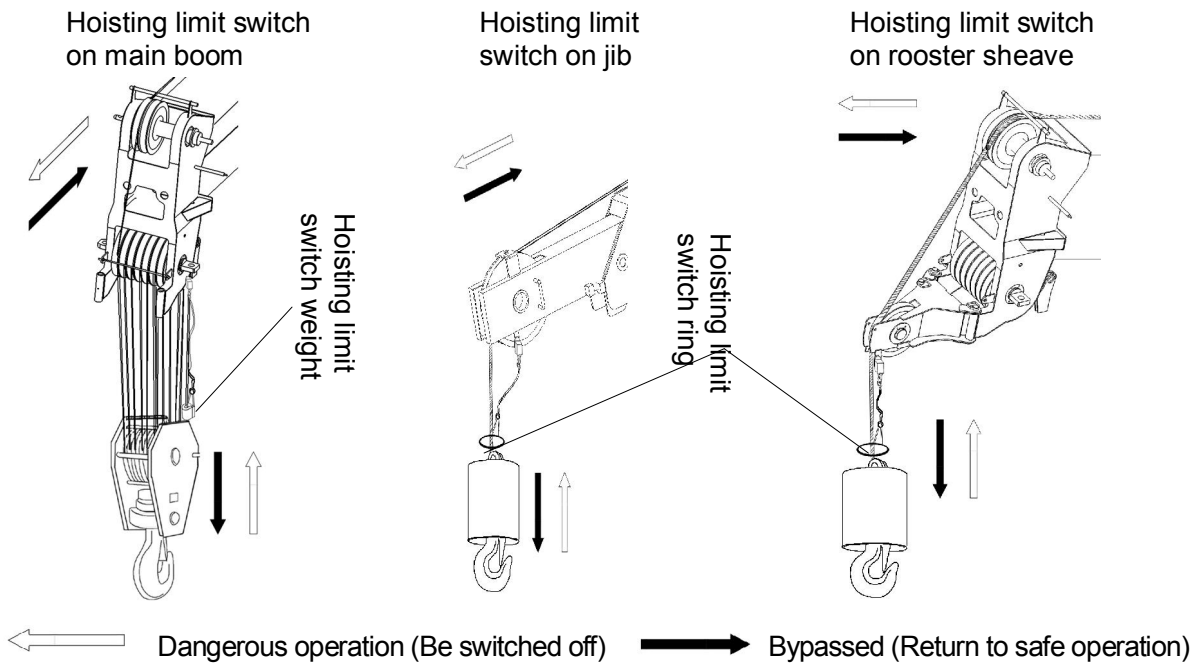

Press the bypass key switch on the control console to switch on the crane movements “Spool up winches”, “Derrick main boom down” and “Telescope boom out” during commissioning and maintenance.

Warning:

Never use the bypass key switch in normal operation!

4.4.5 Hydraulic safety valves

a) Relief valves in hydraulic system

The relief valves in hydraulic system can prevent the pressure in the circuit from rising too high, thus avoid hydraulic pump and hydraulic motor from being damaged and hydraulic system from being overloaded.

b) Outrigger hydraulic lock

If the high-pressure oil pipe which is connected to vertical cylinder is damaged, the two-way hydraulic lock in the outrigger hydraulic circuit can block the pressure oil in the two chambers of outrigger cylinder to prevent the outrigger from retracting or extending, and thus ensure the safe operation of the crane.

c) Locking device for crane movement “Derrick main boom up”

If the high-pressure oil pipe in the hydraulic circuit of derricking cylinder is damaged, the balance valve in the hydraulic circuit can lock the hydraulic oil in the lower chamber of derricking cylinder immediately to prevent the boom from being down automatically, and thus ensure the safe operation of the crane.

d) Locking device for crane movement “Telescope boom out”

If the high-pressure oil pipe in the hydraulic circuit of telescopic cylinder is damaged, the balance valve in the hydraulic circuit can lock the hydraulic oil in the upper chamber of telescopic cylinder immediately to prevent the telescopic boom sections from retracting naturally, and thus ensure the safe operation of the crane.

4.4.6 Bypass operation

If the hook block contacts the hoisting limit switch during its upward movement or lowering limit switch during its downward movement, the hoisting limit switch or lowering limit switch is triggered. The dangerous movements will be switched off.

If the maximum load moment is exceeded, the overload protection control system will switch off all crane movements to increase load moment. The buzzer begins to send out alarm. If really necessary, this switch-off can be bypassed by the bypass key switch in operator's cab. For details, please refer to the relevant information of "Bypass key switch" in Chapter 4.1.5.

Illustration – Control system switches off the dangerous movements

	Main winch		Auxiliary winch		Derrick		Slew		Telescope	
	up	down	up	down	up	down	left	right	out	in
Overloading	×	√	×	√	√	×	√	√	√	√
Overwinding	×	√	×	√	√	×	√	√	×	√
Overlowering	√	×	√	×	√	×	√	√	√	√
Current boom status differs from target status	√	√	√	√	×	×	√	√	√	√

Danger:

If there is a need to lift or lower the hook a little under special conditions, the operator can activate the "Bypass key switch" on the instrument console to bypass the crane's switch-off movements. Such operation should be performed with utmost caution to avoid accident. And all consequences resulted from such operation should be taken by the operator!

Never telescope telescopic boom with a load. Otherwise, all consequences are rest with the operator!

4.4.7 Wind warning system

The wind speed sensor is fitted on the boom head of the crane to detect the wind speed in real time. The wind speed is displayed on the screen of load moment limiter. If the actual wind speed exceeds the displayed maximum value, stop crane operation and lower the boom.

Danger:

Crane can topple over!

If the crane is operated at wind speeds which are larger than the maximum permissible wind speed, then it can topple over and kill personnel!

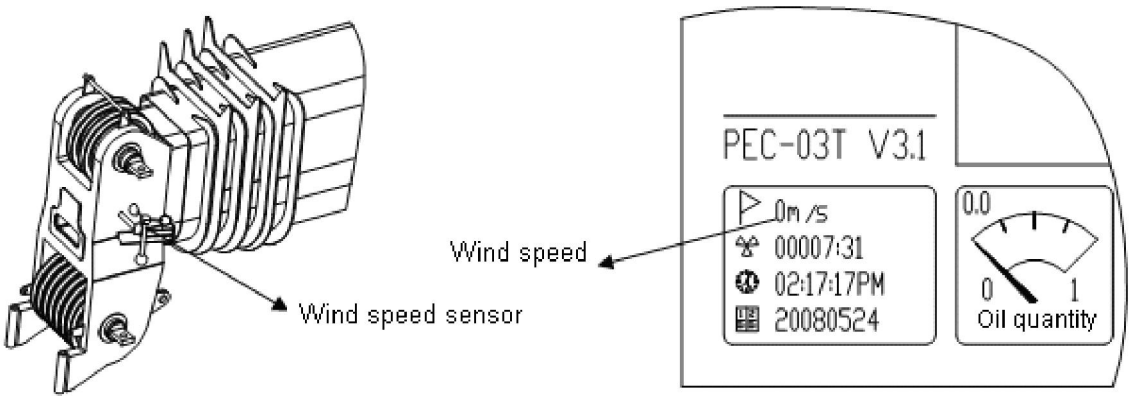

4.4.8 Emergency off switch

The “Emergency off switch” (See the following Fig.) is fitted on the instrument console in operator’s cab. If it is operated, the electrical crane control is switched off. Every movement being carried out will be immediately stopped.

After emergency is removed, the switch-off can be bypassed by turning it in the arrow direction.

Warning:

Only use the “Emergency off switch” in the event of a clear emergency!

Use of the “Emergency off switch” for normal operation is not permitted!

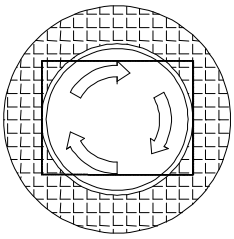

4.5 Crane operation

4.5.1 Preparations for crane operation

Ensure that following checks are operated before operation:

a) Assess the load condition before lifting it;

b) Check the crane position, ground condition and surface bearing condition;

c) Check winches (including wire rope's end, winding drum and pulleys);

d) Check the liquid level and power source of the crane;

Note:

(1) Fuel reserve of the fuel tank is more than 1/4 of the tank capacity (Check the fuel gauge);

(2) The oil level in hydraulic oil tank should be between MIN. and MAX markings in driving condition.

e) The load and working area should be visible and without obstacles within working area. Check the communication system between operator and conductor to ensure that nothing will hinder the operation;

f) Check safety devices for function;

g) Remain the communication between the operator and the rigger.

Warning:

In order to protect the crane and reduce the danger of accidents, always operate the joysticks slowly and cautiously.

Danger:

Ensure that there are no obstacles in the crane working area and no persons in danger zone. Give a short warning signal (horn) before starting a crane movement.

4.5.2 Derricking

The telescopic boom is derricked via an oil cylinder.

The boom angle varies from -0.5° to 83°.

Operate the right joystick to derrick the telescopic boom up / down.

Before derricking, turn the switch A (Shown on the right) to left position.

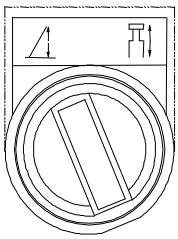

Switch A

Speed of crane movement “Derricking” has 2 stages, normal gear and slow gear, which are activated via switch B (See the following Fig.).

Normal gear:
The more the joystick is deflected to the left or right, the higher the derricking speed will be.

Slow gear:
Switch “Slow gear switch” to right position.

If the boom length ＜ 40 m, the speed of “Derricking” is slow.

If the boom length ≥ 40 m, the speed of “Derricking” is extremely slow.

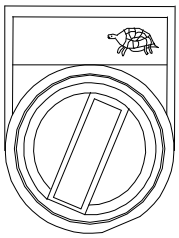

Switch B

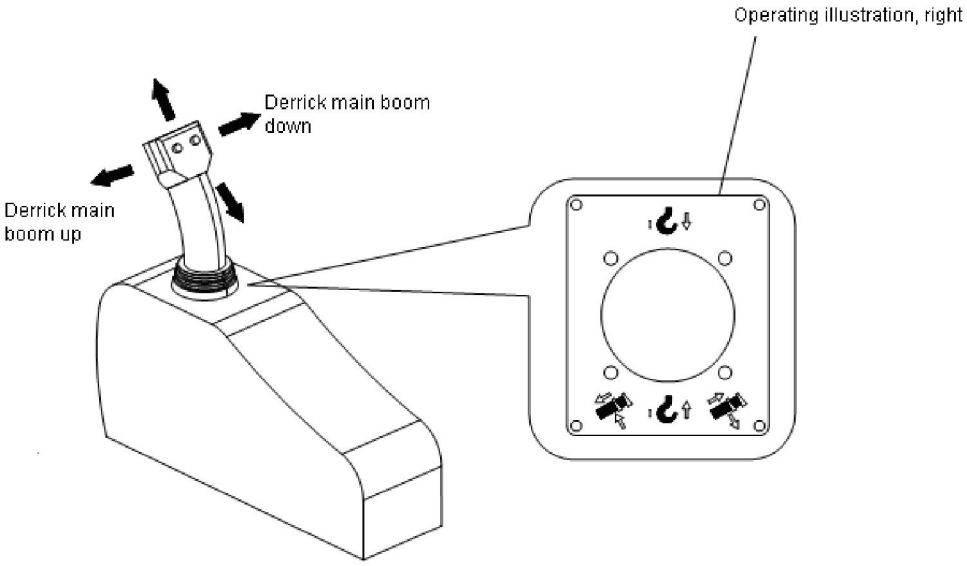

The balance valves fitted in hydraulic system can not only ensure that the load is lifted / lowered steadily but also keep the load at any required position.

Caution:

(1) Operation should be carried out stably. Jerky operation will bring great impact to the crane during load lifting;

(2) Never increasing the working radius with a load. Operator should strictly restrict the maximum working radius according to lifting capacity tables;

(3) Lower the hook fully before derricking up the boom;

(4) For the sake of safety, never derrick the boom down at high speed.

4.5.3 Telescoping

The boom consists of 6 oval boom sections made from low-alloy and high-strength steel.

The telescopic boom is automatically telescoped in / out via a telescopic cylinder. The crane movement “Telescoping” is controlled by the right joystick. Every telescopic section can vary in 3 lengths: 45% of its total, 90% of its total and 100% of its total. The telescopic cylinder cannot bear any load.

Before telescoping, turn switch A (See right Fig.) to right position.

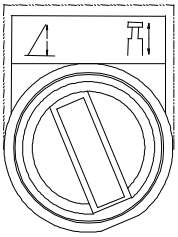

Switch A

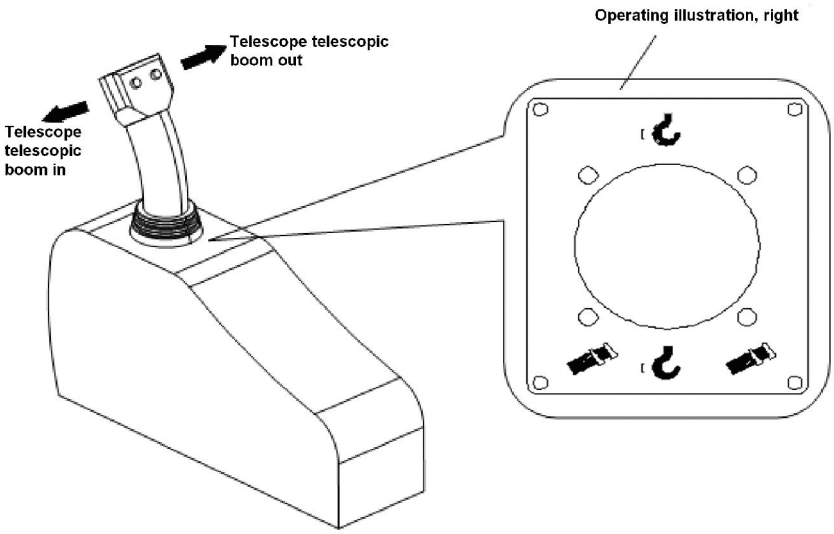

For the details of telescoping operation, refer to Chapter 4.2.

The balance valves fitted in hydraulic system can ensure that the boom is telescoped in / out steadily.

Caution:

(1) When auto telescoping mode is performed, the boom angle should exceed 75°;

(2) The hook will be lifted or lowered with the crane movement “Telescoping”. Therefore, operate the joystick to adjust the height of hook during telescoping;

(3) Carry out telescoping movements with maximum care at low speed. Do not telescope the telescopic boom with a load;

(4) Do not telescope the boom out immediately after the boom is telescoped in. Initiate telescoping movement after 2 seconds;

(5) It is forbidden to pull the load diagonally.

Before carrying out telescoping movement, check whether the block at the head of telescopic sections is in contact with its adjacent telescopic sections tail completely. If not, adjust the shim to make them contact completely and ensure that the boom pin and cylinder pin bear no load under the condition of “Boom telescoped in completely”.

4.5.4 Lifting / lowering

The hoisting mechanism consists of hydraulic motor, balance valve, reducer, brake, lowering limit switch, hoisting limit switch, wire rope, main hook, auxiliary hook and so on.

The hoisting mechanism consists of two main parts: main winch and auxiliary winch. The auxiliary winch is not fitted on the slewing table during driving. The joysticks for controlling main / auxiliary winch are fitted on the right / left boxes in the operator's cab.

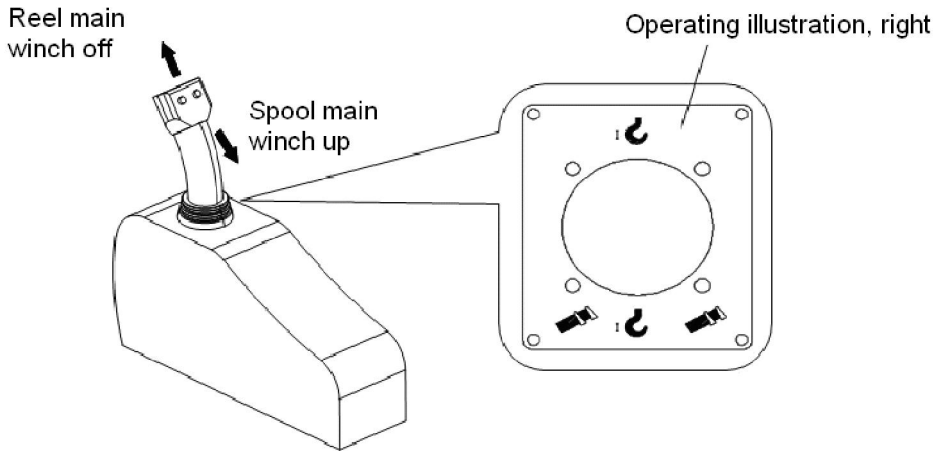

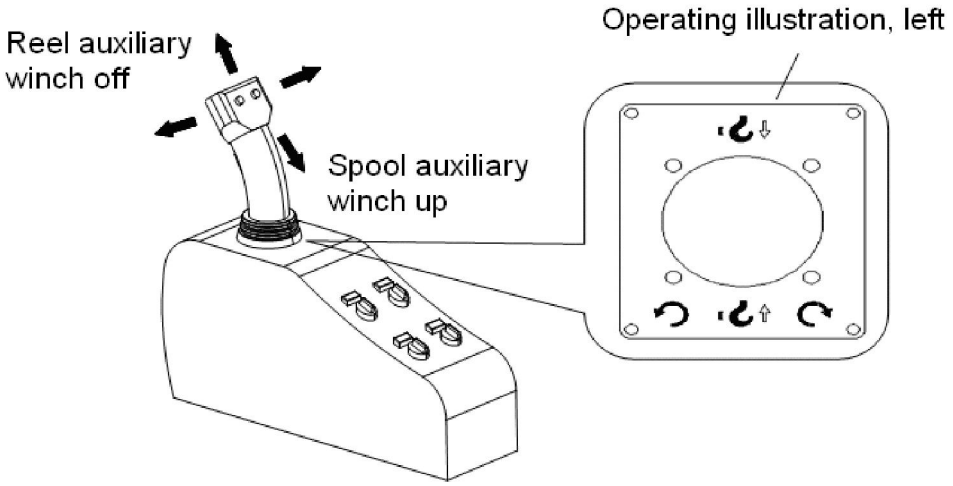

The crane movement "Spool main winch up" or "Reef main winch off" has 3 stages (high speed, normal speed and low speed), which are activated via the "Slow gear switch" (See the following Fig.).

The crane movements "Spool auxiliary winch up" or "Reel auxiliary winch off" have 2 stages (normal speed and low speed), which are also activated via the "Slow gear switch" (See the following Fig.).

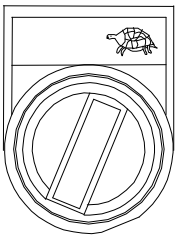

Auxiliary winch

a) Normal speed

The more the left joystick is deflected upward or downward, the higher the speed will be.

b) Low speed

Switch “Slow gear switch” to right position.

Result

Slow gear is applied to crane movements "Spool auxiliary winch up" or “Reel auxiliary winch off ".

Main winch

a) Normal speed

The more the right joystick is deflected upward or downward, the higher the speed will be.

b) Low speed

Switch “Slow gear switch” to right position.

Result

Slow gear is applied to crane movements "Spool main winch up" or “Reef main winch off".

c) High speed

1) Switch off “Slow gear switch”;
2) Deflect the right joystick;
3) Press and hold the button “Rapid gear for main winch”.

Result

Rapid gear is applied to crane movements "Spool main winch up" or “Reef main winch off".

The balance valves fitted in hoisting mechanism can not only ensure that the winches are spooled up / reeled off steadily, but also make the load stay at any required position.

The wire rope may be not long enough with the boom telescoping out and derricking up. Such a problem can be solved by changing the reeving numbers of wire rope. Before changing the reeving numbers, fit the hoisting limit switch weights. For standard reeving numbers for various boom lengths, please refer to the lifting capacity tables.

Caution:

(1) Choose proper reevings in accordance with boom lengths;

(2) Under any conditions, there must be at least three windings of wire rope left on the winding drum;

(3) When a load is lifted away from the ground, it should first be suspended in the air for a moment. Do not lift the load until the operator confirms that there is no safety hazard. Do not derrick up and telescope out the boom to lift the load if the load does not leave away from the ground;

(4) Do not change the joystick between “Spool up” and “Reel off” jerkily. The operator should return the joystick to neutral position and ensure that the winding drum has stopped rotating before changing between “Spool up” and “Reel off”. Otherwise, the machine will be damaged;

(5) The slings must be of enough strength;

(6) The lifting capacity includes the mass of the hook and slings besides the actual load weight.

4.5.5 Slewing

The slewing system consists of slewing ring and slewing mechanism which includes hydraulic motor, planet-gear reducer, slewing brake valve, brake, drive gear and so on.

a) Slewing speed

The speed of the crane movements “Slewing”, varying within 0 – 1.5r/min, is controlled by the deflection of left joystick. The slewing speed has 2 stage, normal speed and low speed, which can be activated by switching on the “Slow gear switch”. The slow gear offers good micro-positioning performance.

b) Slewing operation

Slewing movements can be activated by the deflection of the left joystick fitted in the operator’s cab.

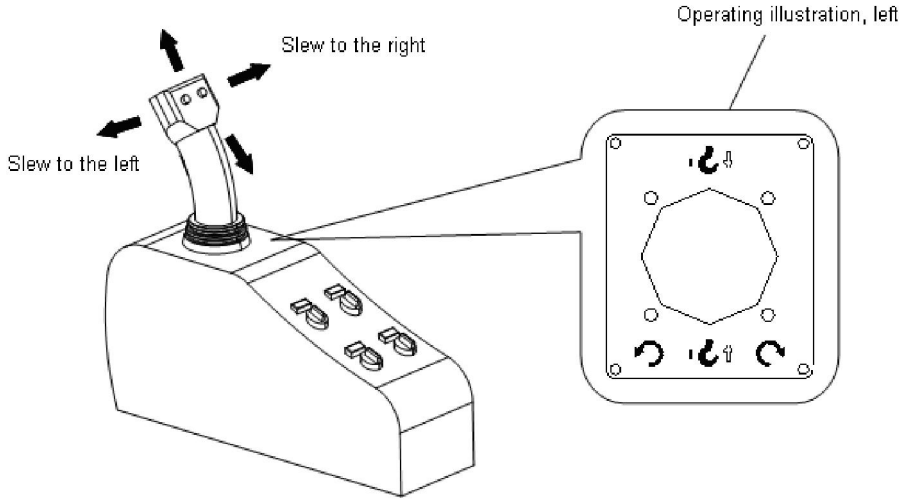

Caution:

(1) Ensure that the superstructure is unpinned before initiating the slewing movement. Insert and secure the pin after finishing this operation;

(2) Ensure that there are no obstacles in the crane slewing area and no persons in the danger zone. Give a short warning signal (horn) before starting a crane movement;

(3) Initiate the slewing movements smoothly. It is prohibited to stop slewing movements or change slewing direction jerkily;

(4) The longer the boom is, the lower the slewing speed is.

(5) The heavier the load is, the lower the slewing speed is.

(6) In order to ensure safe operation of a new crane, the user must check bolts of slewing ring and tighten the bolts with 954N.m tightening torque after initiating for 100 operating hours. Then check and tighten the bolts after 100 and 300 operating hours respectively. After that, do the checks every 500 hours;

(7) The switch “Central lubricating system / extending or retracting counterweight cylinder” (See the Fig. on the right) must be turned to neutral position before slewing. Otherwise, the left joystick cannot initiate slewing movements. At this moment, the slewing movements are controlled by the remote control box.

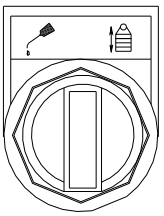

4.5.6 Rope reeving

Ensure that the following preconditions are fulfilled:

– The outriggers have already been extended;

– The main boom has been fully telescoped in and turned to the side or rear working area.

a) Derrick boom down and place hook on the ground;

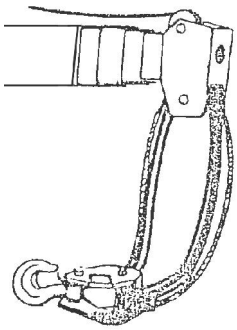

b) Remove the rope securing tubes;

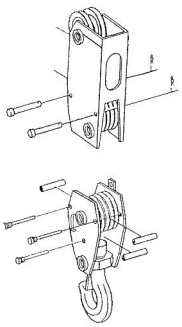

c) Remove hoisting limit switch weight from wire rope;

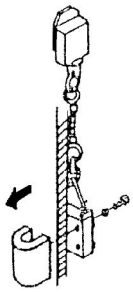

d) Remove the pouch socket;

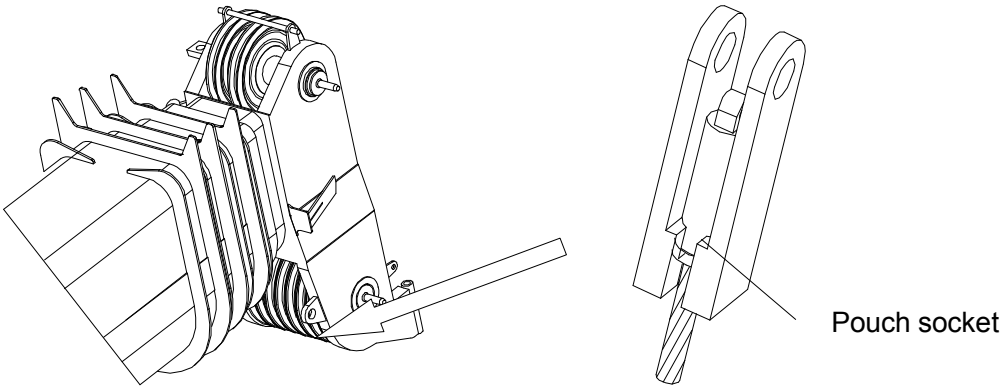

e) Change rope reevings;

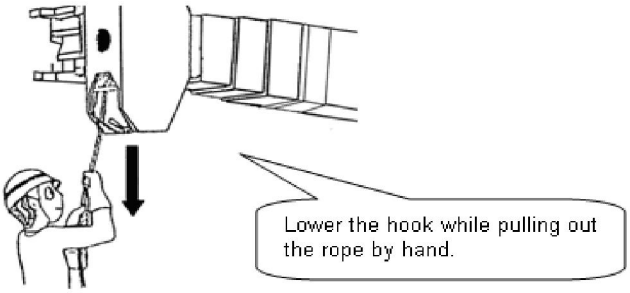

Reeve the rope through boom head pulley and hook pulley, and choose correct reevings according to the lifting capacity table. Secure rope in the boom head (even reeving number) and rope in the hook (odd reeving number).

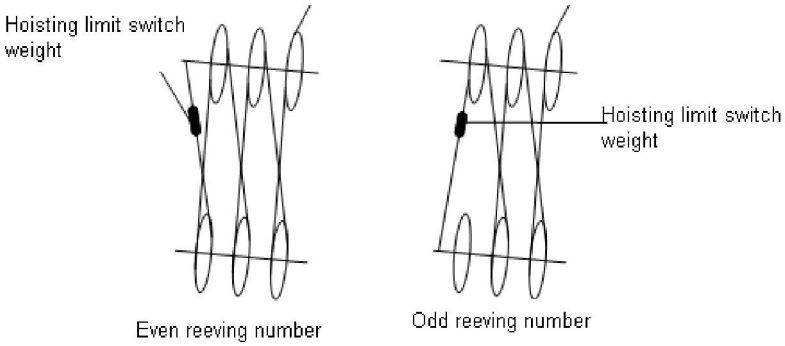

Caution:

(1) The hoisting limit switch weight should be fitted on the rope end to ensure the hoisting limit switch in function;

(2) Spool the rope smoothly and orderly onto the drum.

4.5.7 Simultaneous crane movements

The simultaneous crane movements, which can greatly improve the working efficiency, refer to that the crane can carry out 2 movements simultaneously. However, because the simultaneous crane movements are towards two different directions, the operator should take maximum care to avoid accident.

Ensure that the following preconditions are met when initiating simultaneous crane movements:

– Activate the PTO switch to make the engine speed achieve 1850 r/min;

– Do not deflect the joysticks to limit position.

There are 9 simultaneous crane movements available:

a) Auxiliary winch + main winch

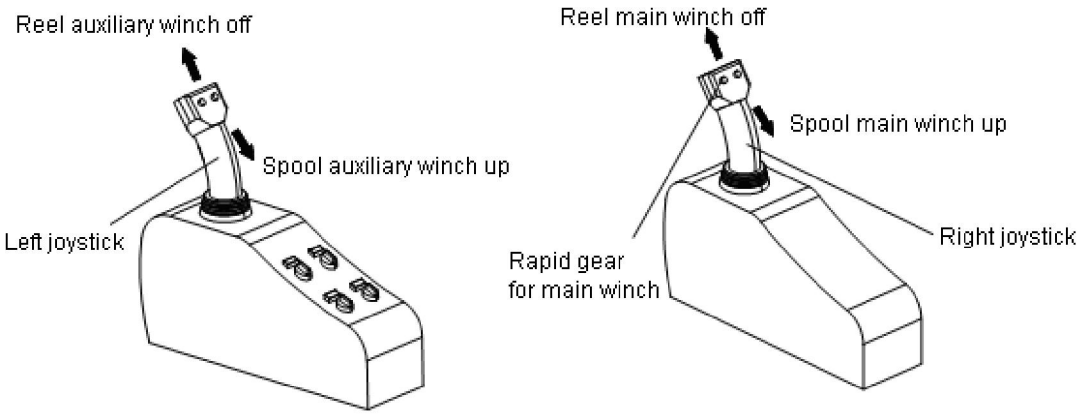

– Deflect the left joystick and right joystick at the same time according to the above Fig. to make auxiliary winch and main winch work simultaneously;

– The more the joysticks are deflected upward or downward, the faster the relevant movements will be;

– Press and hold button “Rapid gear for main winch” without activating the “Slow gear switch” to achieve rapid movements of main winch;

– Switch on “Slow gear switch” to make relevant movements get slower.

b) Auxiliary winch + derricking

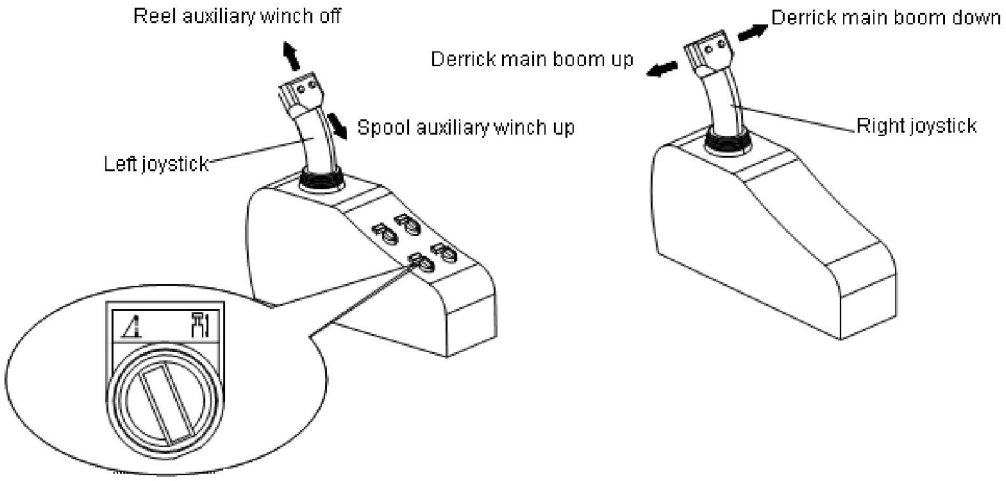

– Turn switch “Pre-selection of derrick / telescope” (on left control box) to left;

– Operate left joystick and right joystick at the same time according to above Fig. to make auxiliary winch and derricking mechanism work simultaneously;

– The more the left joystick is deflected upward or downward and right joystick is deflected leftward or rightward, the faster the relevant movements will be;

– Switch on “Slow gear switch” to make relevant movements get slower.

c) Auxiliary winch + telescoping

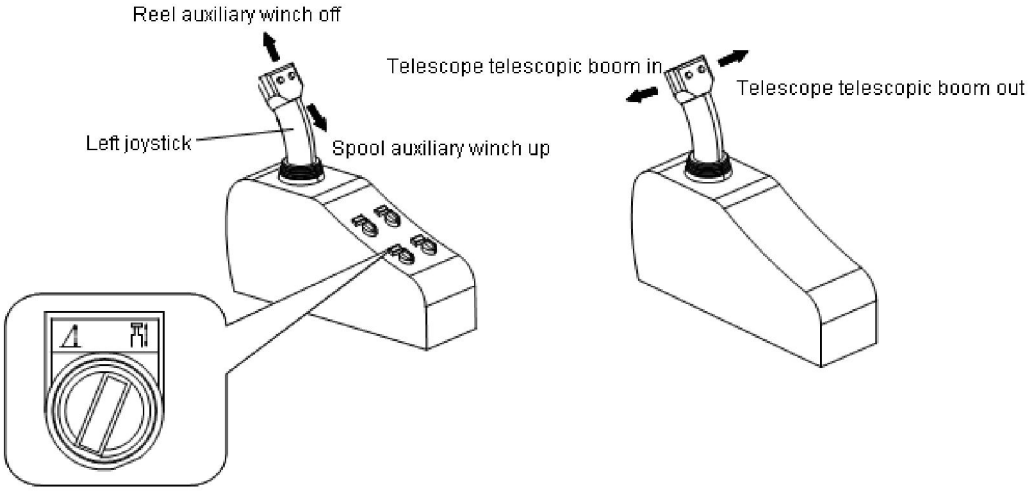

– Turn switch “Pre-selection of derrick / telescope” (on left control box) to right;
– Operate left joystick and right joystick at the same time according to above Fig. to make auxiliary winch and telescopic boom (in manual telescoping operation) work simultaneously;
– The more the left joystick is deflected upward or downward and right joystick is deflected leftward or rightward, the faster the relevant movements will be;
– Switch on “Slow gear switch” to make relevant movements get slower;
– For automatic telescoping operation, the right joystick and “Slow gear switch” are invalid.

Caution:

It is strongly recommended that the switch “Pre-selection of manual / automatic telescoping operation” is turned to left position (Auto) during telescoping operation.

d) Slewing + main winch

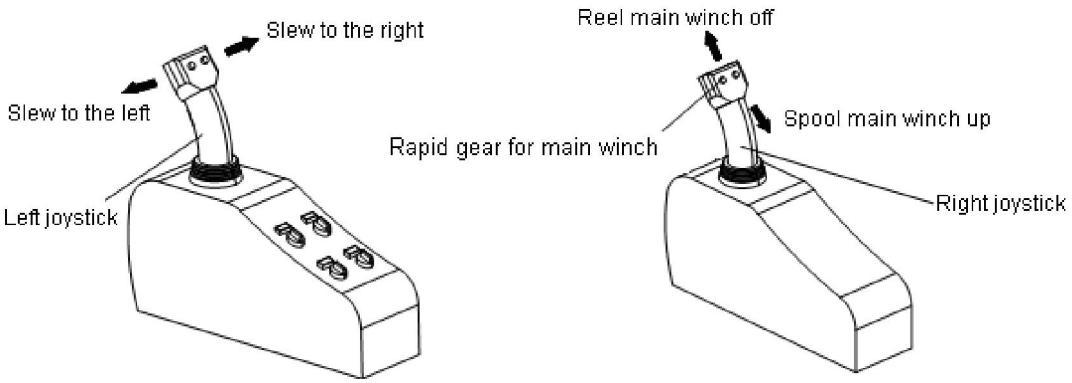

– Operate left joystick and right joystick at the same time according to the above Fig. to make slewing mechanism and main winch work simultaneously;
– The more the left joystick is deflected leftward or rightward and right joystick is deflected upward or downward, the faster the relevant movements will be;
– Press and hold button “Rapid gear for main winch” without activating the “Slow gear switch” to achieve rapid movements of main winch without load.

e) Slewing + telescoping

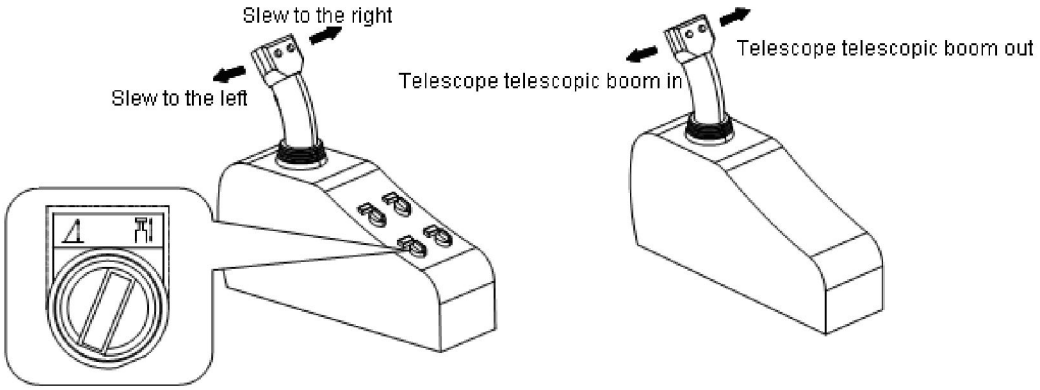

– Turn switch “Pre-selection of derrick / telescope” (on left control box) to right;
– Operate left joystick and right joystick at the same time according to above Fig. to make crane movements “Slewing” and “Telescoping” carried out simultaneously;
– The more the joysticks are deflected leftward or rightward, the faster the relevant movements will be;
– Switch on “Slow gear switch” make relevant movements get slower;
– For automatic telescoping operation, the right joystick and “Slow gear switch” are invalid.

Caution:

It is strongly recommended that the switch “Pre-selection of manual / automatic telescoping operation” is turned to left position (Auto) during telescoping operation.

f) Slewing + derricking

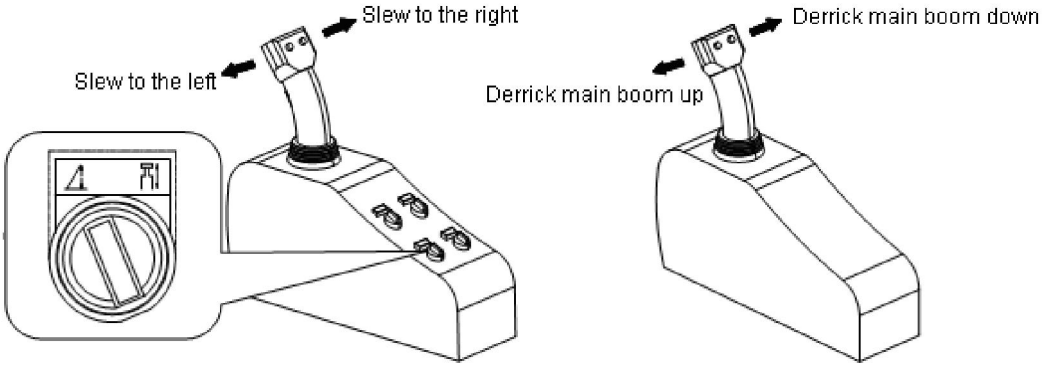

– Turn switch “Pre-selection of derrick / telescope” (on left control box) to left;
– Operate left joystick and right joystick at the same time according to above Fig. to make crane movements “Slewing” and “Derricking” carried out simultaneously;
– The more the joysticks are deflected leftward or rightward, the faster the relevant movements will be;
– Switch on “Slow gear switch” to make relevant movements get slower.

g) Auxiliary winch + slewing

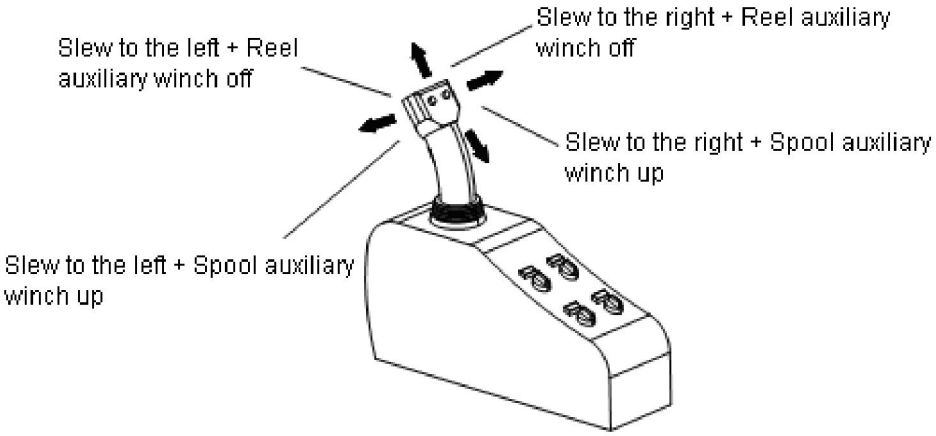

– Deflect the left joystick between any two adjacent arrows with an angle of 45° to make auxiliary winch and slewing mechanism initiate relevant movements (See above Fig.) simultaneously;
– The more the joystick is deflected leftwards or rightwards, the faster the slewing movements become, and the slower the winch movements;
– The more the joystick is deflected upwards or downwards, the faster the winch movements become, and the slower the slewing movements;
– Switch on “Slow gear switch” to make relevant movements get slower.

h) Main winch + derricking

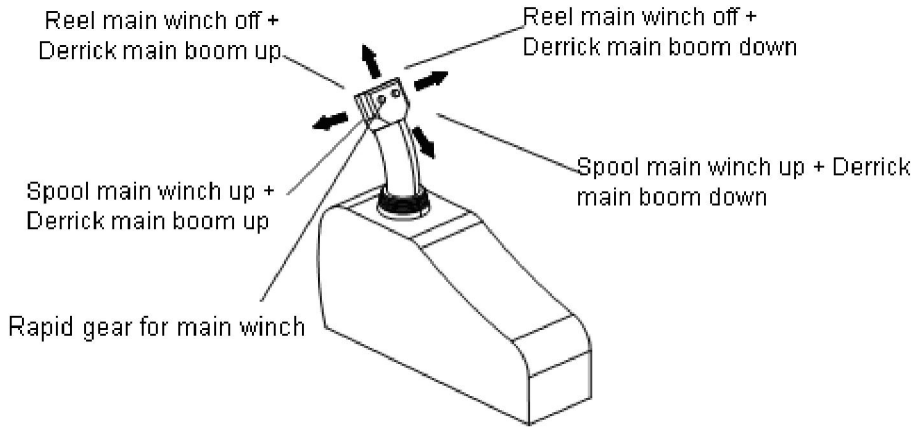

– Deflect the right joystick between any two adjacent arrows with an angle of 45° to make main winch and derricking mechanism initiate relevant movements (See above Fig.) simultaneously;

– The more the joystick is deflected leftwards or rightwards, the faster derricking movements becomes, and the slower the winch movements;

– The more the joystick is deflected upwards or downwards, the faster the winch movements become, and the slower the derricking movements;

– Press and hold button “Rapid gear for main winch” without activating the “Slow gear switch” to achieve rapid movements of main winch without load.

i) Main winch + telescoping

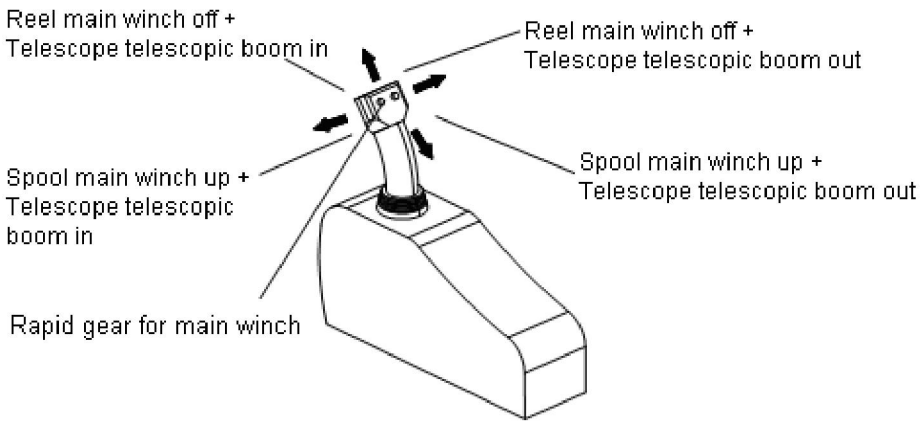

- In manual telescoping mode, deflect the right joystick between any two adjacent arrows with an angle of 45° to make main winch and telescoping mechanism initiate relevant movements (See above Fig.) simultaneously;
- The more the joystick is deflected leftwards or rightwards, the faster telescoping movements becomes, and the slower the winch movements;
- The more the joystick is deflected upwards or downwards, the faster the winch movements become, and the slower the telescoping movements;
- Switch on “Slow gear switch” to make relevant movements get slower;
- Press and hold button “Rapid gear for main winch” without activating the “Slow gear switch” to achieve rapid movements of main winch without load;
- For automatic telescoping operation, the leftwards and rightwards movements initiated via the right joystick and “Slow gear switch” are invalid. However, the main winch movements are valid.

Caution:

Carry out simultaneous crane movements without taking a load or with the load being lifted away from ground. It is prohibited to telescope the boom with load.

4.5.8 Central lubricating system

The crane superstructure is equipped with an advanced 24V central lubricating system. All the lubricating points are automatically supplied with the correct grease quantity via a progressive distribution valve. After the master power switch or the ignition starter switch is switched on, the pumps begin to supply grease to greasing points according to specified lubrication interval.

A lubrication interval consists of pumps running interval and their running time. Once the interval achieves the set value, the pumps begin running until their working hour reaches the set value. The greasing procedure is repeated if the crane keeps working.

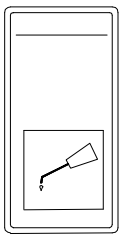

For detailed lubricating points, refer to the following illustration:

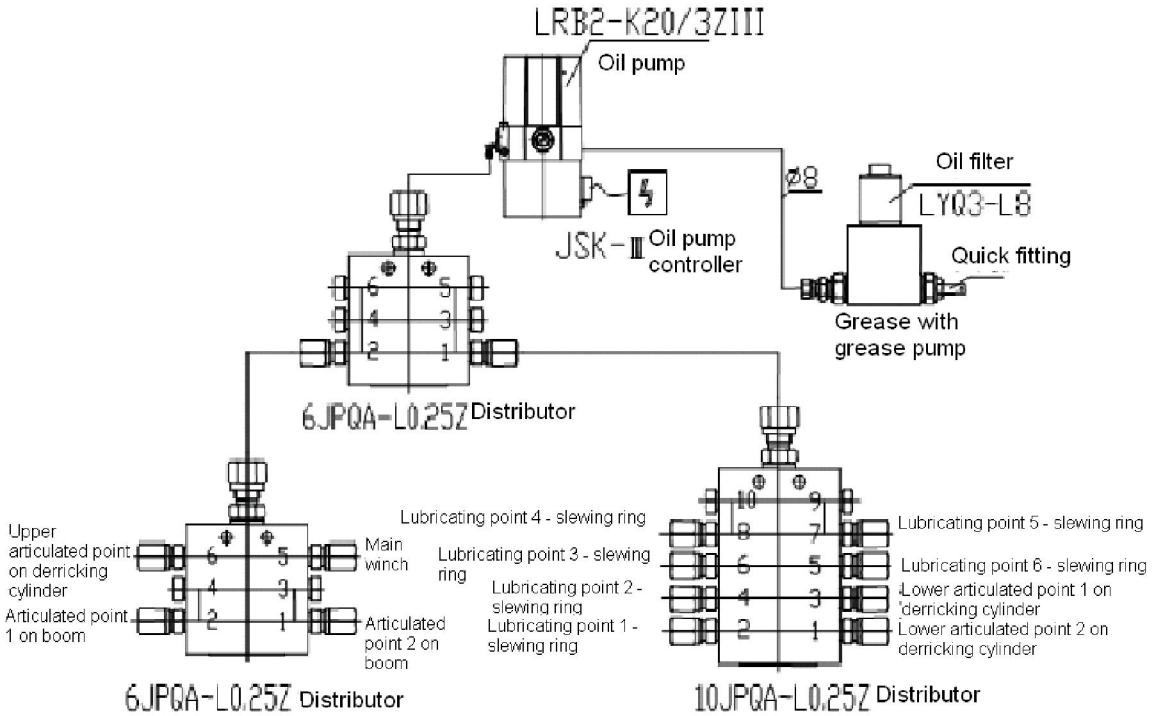

Operate the controller installed in operator's cab to set the running time and running interval of central lubricating system.

Set the values as the following illustration:

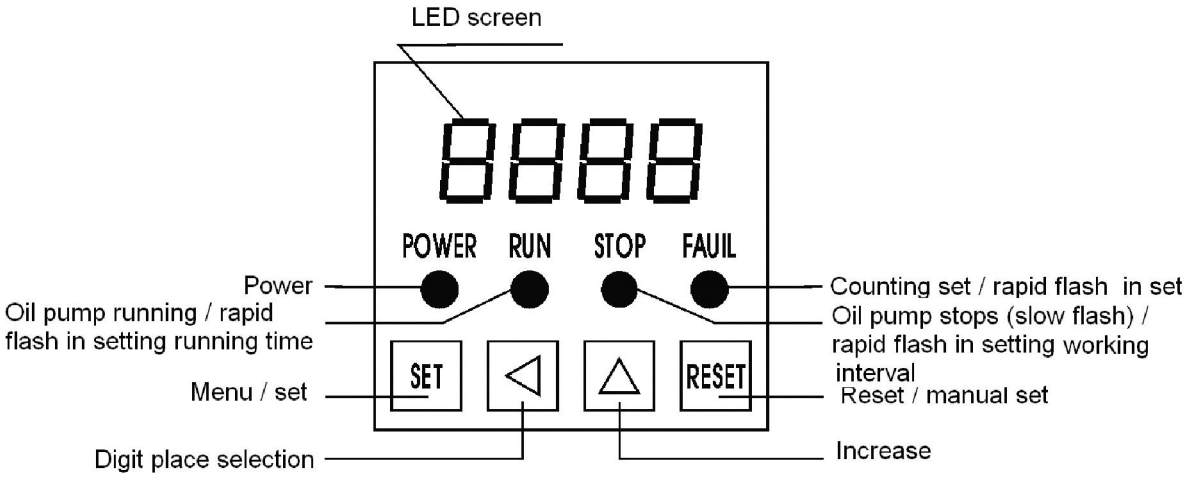

a) How to set the running time:

- Press and hold the button “SET” for 5 seconds to switch to “Running time set” status.
- The control light “RUN” lights up and the one-digit light flashes;
- Press button “△” to increase the number;
- Press button “◁” to select the next left digit, the unit is second;
- Press the button “SET” again to confirm the set operation and switch to “Interval set” status.

b) How to set the running interval:

- The control light “STOP” lights up and the one-digit light flashes;
- Press button “△” to increase the number;
- Press button “◁” to select the next left digit, the unit is minute;
- Press the button “SET” again to confirm the set operation and switch to “Distributor circular counting” status.

c) How to set the distributor circular counting:

- The control light “FAULT” lights up and the one-digit light flashes;
- Press button “△” to increase the number;
- Press button “◁” to select the next left digit, the unit is minute;
- Press the button “SET” again to confirm the set operation, then the system enters into normal working status.

It is recommended to set the running time at 1200s and the running interval at 60 minutes in the initial stage. After all the lubricating points work normally, set the running time at 1200s and the running interal at 180 minutes.

Note:

The instructions above is only apply to Zhejiang Liubian central lubricating device.

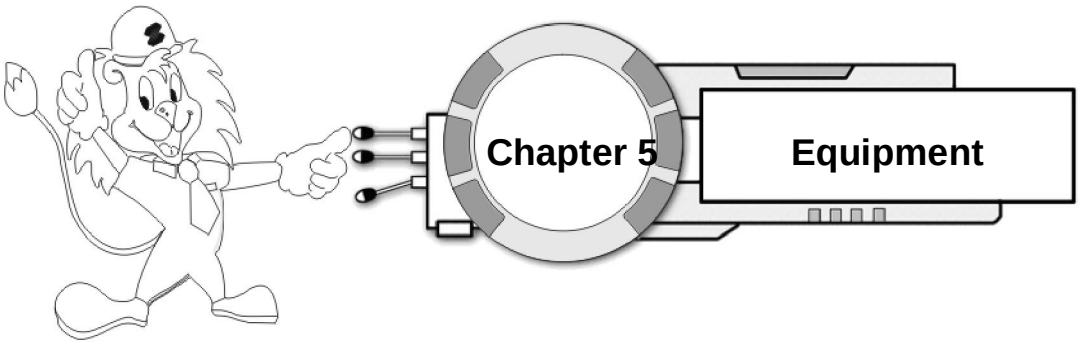

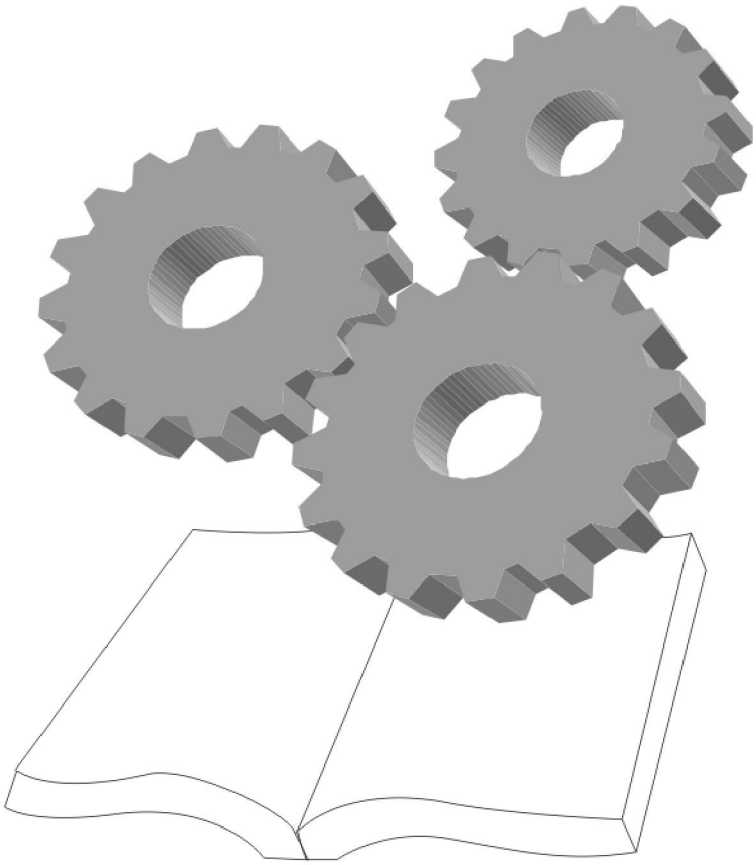

ZOOMLION

5.1 Safety technical guidelines for assembly

a) The hoist rope must be reeved between the rope pulley on the boom head and hook pulley in accordance with the corresponding reevings specified in lifting capacity table;

b) Counterweight plates must be fitted according to lifting capacity tables;

c) Lattice components which are not in contact with ground during assembly / disassembly must be supported by appropriate and stable materials;

Danger:

(1) All assembly work must be carried out using suitable aids (scaffolding or lifting platforms, etc.)! If this is not observed, personnel could fall and suffer life-threatening injures;

(2) Do not stand beneath the lattice jib especially when the lattice jib is being pinned or unpinned.

d) If the lattice components are pushed inside each other for transportation purposes, they must each be secured with 2 chains;

Danger:

If lattice components are not secured, the inside lattice components will slide out and fall down. This can result in life-threatening injuries to personnel.

e) Perform the following checks before supporting the crane:

1) Check whether the axle suspension is locked;

2) Check whether the ground provides adequate load-bearing capacity;

3) Check whether the support pads are secured in their operating positions;

4) Check whether the crane is leveled;

5) Check whether there is sufficient safety clearance to slopes and ditches;

6) Check that the tires are not in contact with the ground;

7) Check whether there are any live cables within the operating range of the crane;

8) Ensure that the work can be carried out with minimum boom projection;

9) Check that there are no obstacles which might hinder required crane movement;

10) The ropes must be checked by an expert before assembly and checks must be performed at regular intervals in order to detect possible damage or wear and tear at an early age;

Danger:

The ropes must be replaced immediately if any of the following damage is detected.

(1) Breakage of a strand;

(2) Wire breaks;

(3) Broken wire nests;

(4) Reduction in the rope diameter by more than 10% of the nominal size;

(5) Rope deformation.

In order to guarantee safety and operating characteristics, only use original Zoomlion

replacement parts.

Danger:

After replacing the hoist rope, the lowering limit switch must be readjusted to switch off movement when only 3 hoist rope windings remain on the winch; otherwise, the rope end attachment may be torn out causing the load to fall off.

11) Depressurize hydraulic system before connecting and disconnecting the hydraulic lines with quick fittings (Turn off the engine and wait for about 5 minutes). The hydraulic fittings should be tightened or unscrewed by hand rather than by tools, otherwise, fittings will be damaged;

Danger:

Please ensure the quick fittings are connected correctly. Incorrect coupling can result in accident from pressure loss or sudden leakage.

12) Before setting-up and taking-down the boom (with the jib and jib extension assembled), ensure that the following prerequisites are met:
    - The crane is properly supported and level;
    - The telescopic boom is fully telescoped in;
    - The jib and jib extension have been fitted and the counterweight has been attached to the slewing table in accordance with the lifting capacity table;
    - All pinned connections have been secured;
    - All limit switches have been correctly fitted and are fully operational;
    - The hoist rope has been correctly placed in the rope pulleys with the rope securing tube to prevent it from jumping out;
    - There are no loose parts on the boom.

Danger:

In winter, the telescopic boom, jib, jib extension and associated components (limit switches, cable drums, flashing beacon, wind speed sensor etc.) must be kept free of snow and ice.

Incorrectly fitted or faulty limit switches and falling parts (pins, spring-loaded safety pins, ice etc.) can cause injury!

5.2 Jib

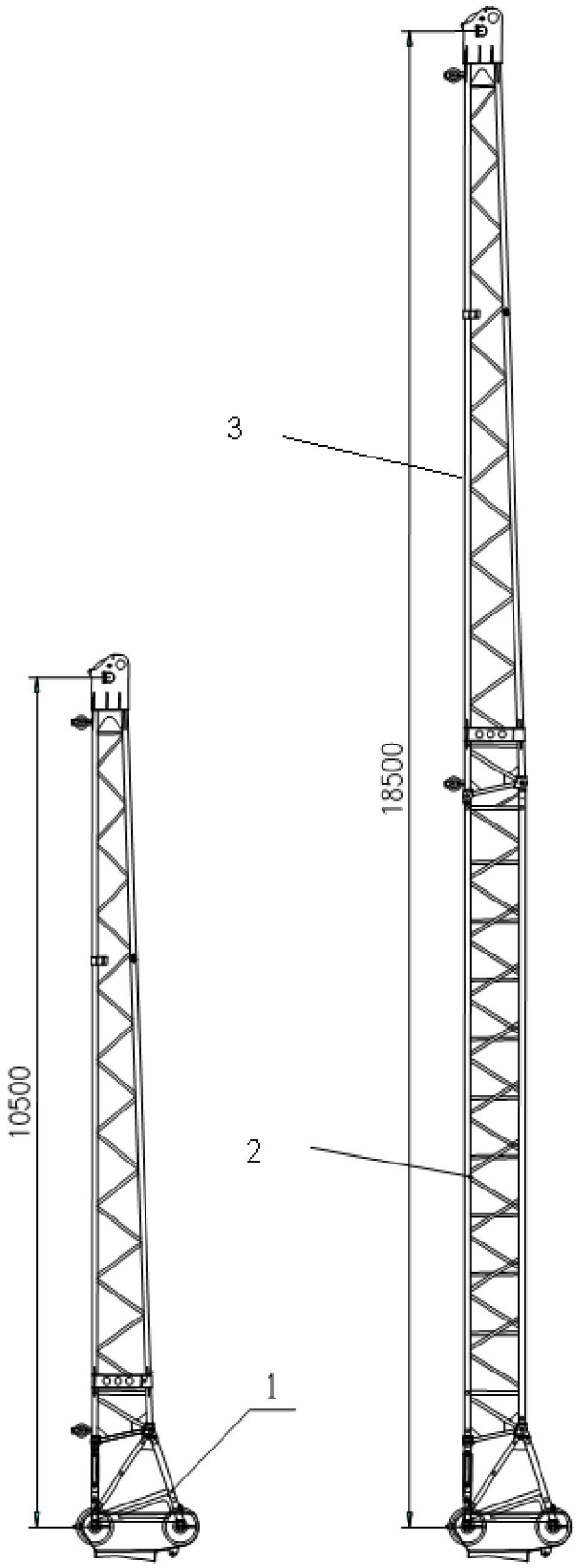

1 Adapter 2 Jib section 1 3 Jib section 2

5.2.1 General

Jib is one of the important components of truck crane. It is auxiliary equipment used to increase the crane lifting height. With the jib assembled, the load can be lifted to a higher height and the working radius can be enlarged via changing offset.

This crane is equipped with 2 lattice jib sections (See above illustration). The jib is articulated on the telescopic boom with pins.

Length of jib section 1:	10.5 m
Length of jib section 1 + jib section 2:	18.5 m
Weight of adaptor:	124kg
Weight of jib section 1:	546kg
Weight of jib section 2:	420kg
Weight of connecting parts:	98kg
Total weight:	1188kg

5.2.2. Assembly

The jib can be assembled below an angle of 0° or 30° to the telescopic boom according to working requirements.

5.2.2.1 Assembly of the jib below an angle of 0°

a) Extend the outriggers and level the crane with support control unit;

b) Fully telescope the telescopic boom in and derrick it down to the rear or the side in the -2° position. Ensure there is 30m slewing range to the slewing center;

c) Connect adaptor with jib section 1;

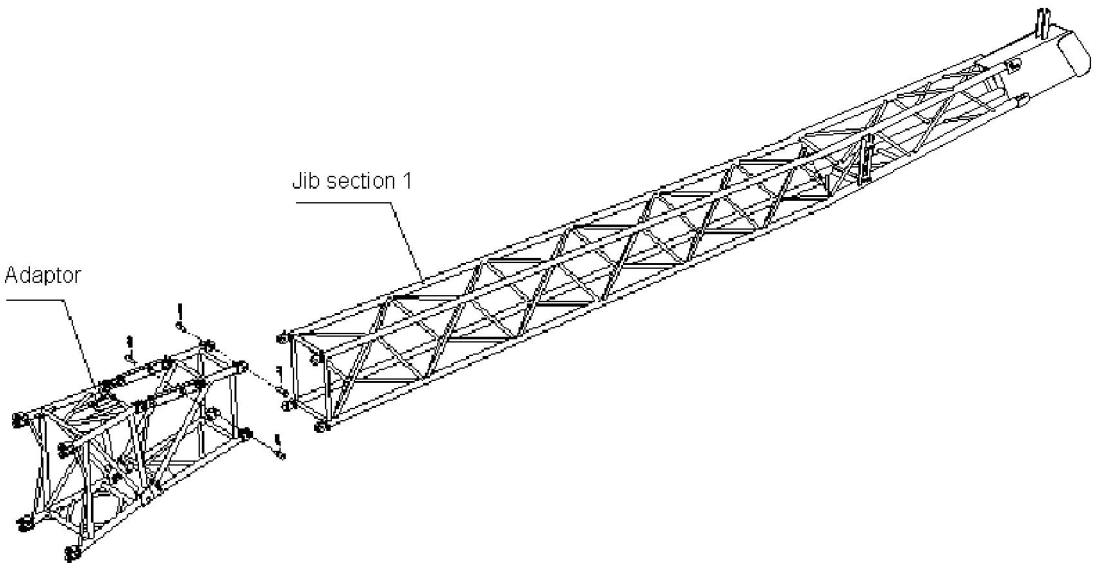

d) Lift the jib section 1 and adaptor which have been assembled together with an auxiliary crane. Align the boom head pin bores with the pin bores of adaptor and secure with pins;

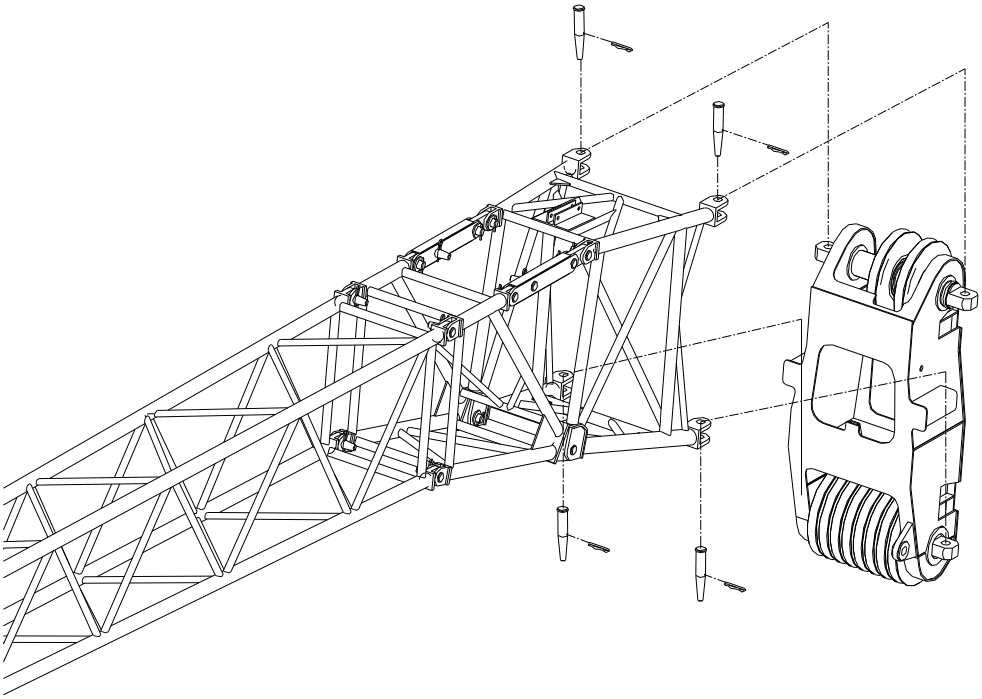

e) Reeve the auxiliary hoist rope; install the auxiliary hook and the hoisting limit switch. Check the jib for proper assembling.

Warning:

Do not drive the crane with jib. Otherwise, the deadweight of the crane will exceed the limit.

Danger:

It is prohibited to stand under the jib during swing operation!

The jib and other components – due to an assembly error – can fall down and cause fatal injuries.

5.2.3 Angle settings

The jib can be assembled below an angle of 0° or 30° to the telescopic boom. The relevant angle is set using pins.

See the following illustration:

● For angle setting 0°

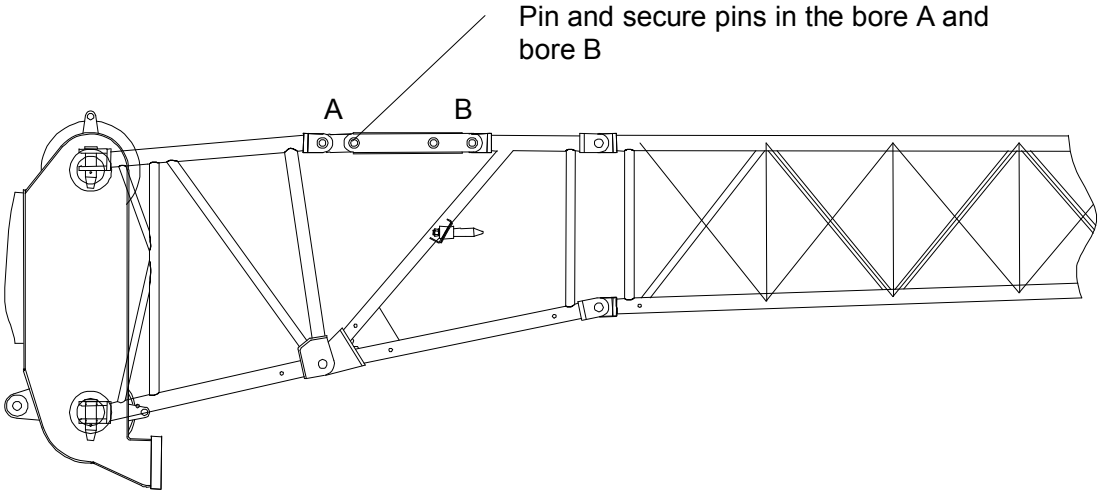

● For angle setting 30°

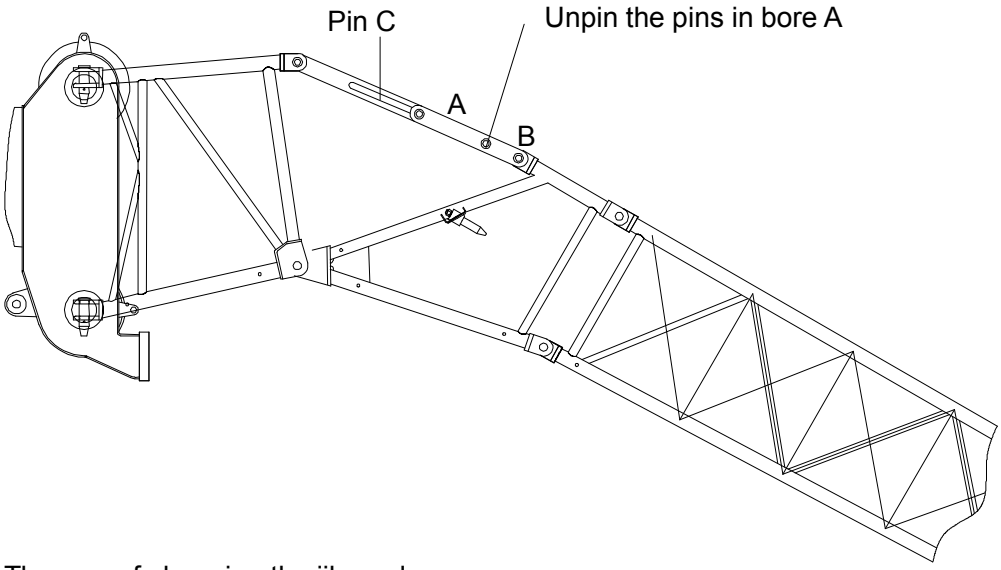

The way of changing the jib angle:

a) Deflect the left joystick to reel off the auxiliary hoist rope for 2m to 3m at low speed;

b) Derrick the main boom down to its minimum angle until the jib head lightly touches the ground. If the jib head cannot touch the ground, support it with plates;

c) Unpin the pins in bore A (see above illustration);

d) Derrick up the telescopic boom slowly until pin in bore A touches pin C and the offset is set to 30°.

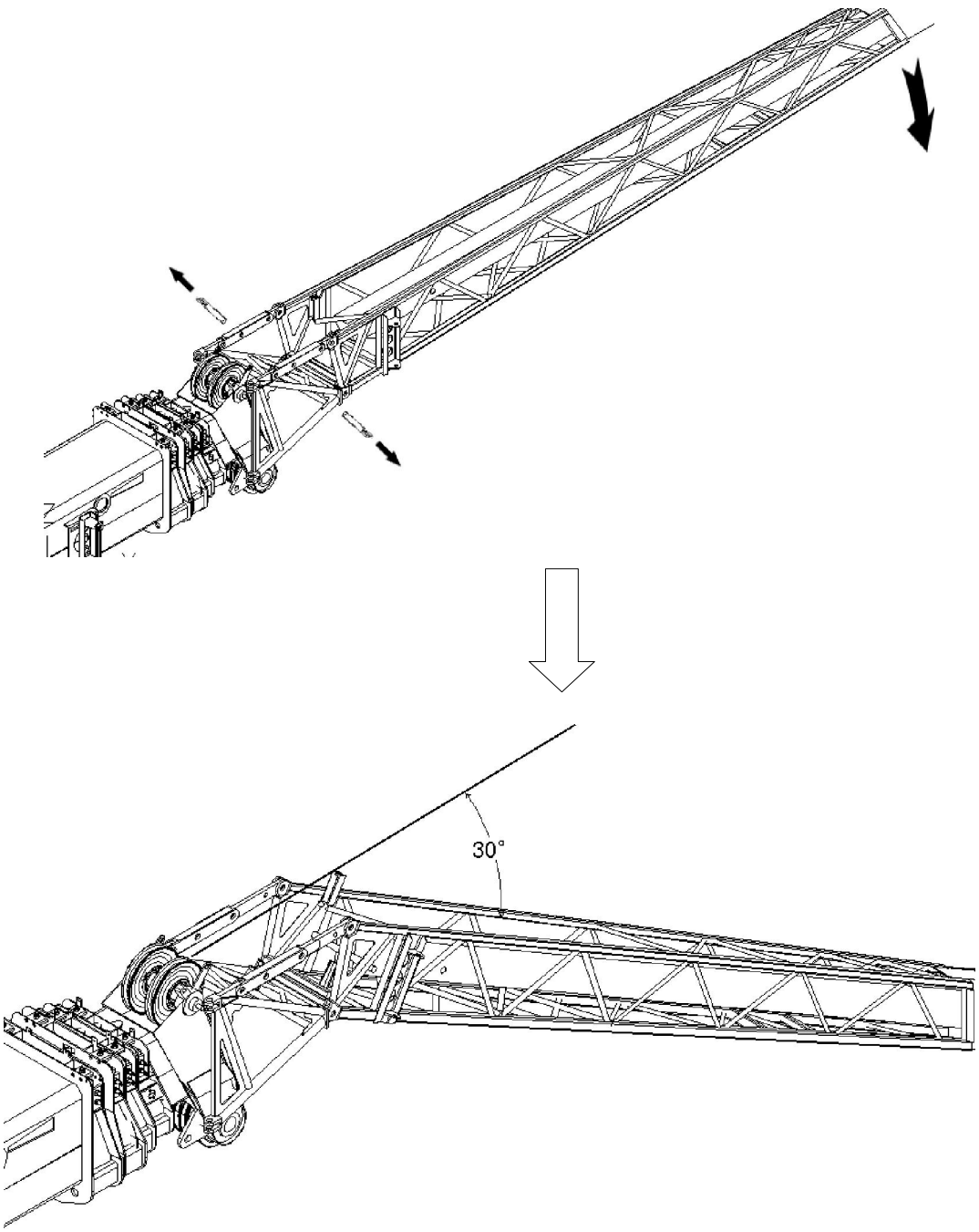
30°

5.2.4 Removing

After jib operation, use an auxiliary crane to lift the jib to release pins. Put the jib at a suitable position for storage and transportation.

5.2.5 Electrical connections (See the following illustration)

Caution:

The electrical connecting plugs and sockets should be protected against contamination and dust. For operation with jib, the wind speed sensor on boom head should be assembled on jib head.

5.2.5.1 Electrical connections on 10.5m jib

a) Single hook operation

Caution:

In single hook operation, the wind speed sensor (optional) and the hoisting limit switch on jib should be connected.

1) Insert the cable plug at point A into corresponding socket;
2) Insert the cable plug at point D into corresponding socket;
3) Insert the cable plug at point E into corresponding socket;
4) Insert the cable plug at point F into corresponding socket;
5) Insert the cable plug at point H into corresponding socket;
6) Short circuit the socket at point I.

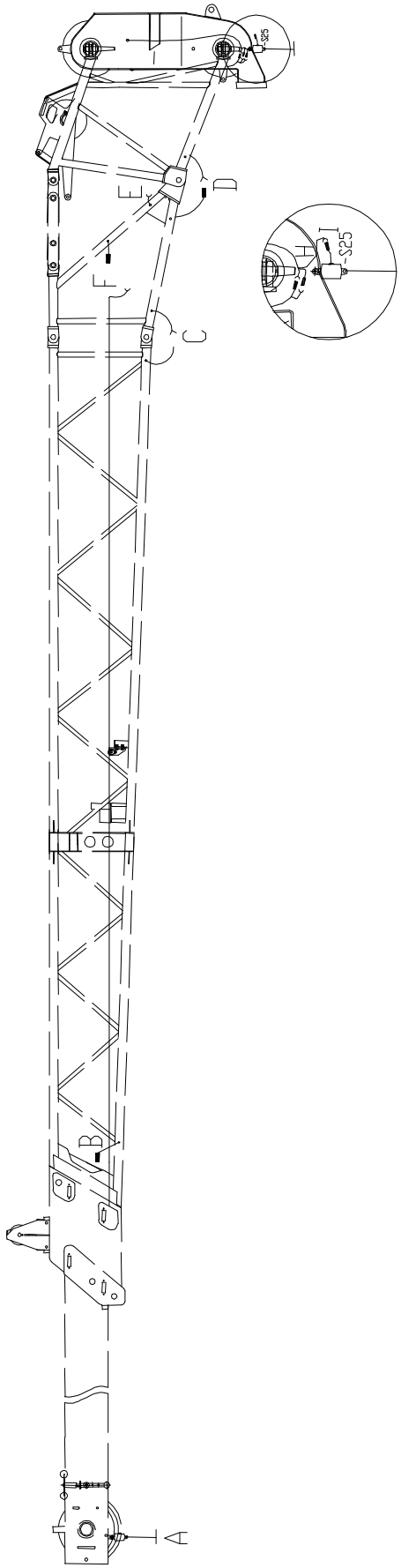
A
B
C
D
E
F
H
I
S25

b) Two hook operation

Caution:

In two hook operation, the wind speed sensor (optional), the hoisting limit switch on telescopic boom and the hoisting limit switch on the jib should be connected.

1) Insert the cable plug at point A into corresponding socket;
2) Insert the cable plug at point D into corresponding socket;
3) Insert the cable plug at point E into corresponding socket;
4) Insert the cable plug at point F into corresponding socket;
5) Insert the cable plug at point H into corresponding socket;
6) Insert the cable plug at point I into corresponding socket.

Caution:

In two hook operation, the hoisting limit switch on telescopic boom and the hoisting limit switch on the jib are active.

5.2.5.2 Electrical connections on 18.5m jib

a) Single hook operation

Caution:

In single hook operation, the wind speed sensor and the hoisting limit switch on jib should be connected.

1) Insert the cable plug at point A into corresponding socket;
2) Insert the cable plug at point B into socket F;
3) Insert the cable plug at point C into corresponding socket;
4) Insert the cable plug at point D into corresponding socket;
5) Insert the cable plug at point H into corresponding socket;
6) Short circuit the socket at point I.

b) Two hook operation

Caution:

In two hook operation, the wind speed sensor, the hoisting limit switch on telescopic boom and the hoisting limit switch on the jib should be connected.

1) Insert the cable plug at point A into corresponding socket;

Insert the cable plug at point B into socket F;

2) Insert the cable plug at point C into corresponding socket;
3) Insert the cable plug at point D into corresponding socket;
4) Insert the cable plug at point H into corresponding socket;
5) Insert the cable plug at point I into corresponding socket.

Caution:

In two hook operation, the hoisting limit switch on telescopic boom and the hoisting limit switch on the jib are active.

5.2.6 Reeving in the auxiliary hoist rope

- Place hoist rope from the main or auxiliary winch over rope guide pulley 1 and over rope guide pulley 2 at jib head.

Note:

When placing hoist rope over rope guide pulley 2, remove the nuts, screws and rope securing tube first.

- Tie the load hook with hoist rope.

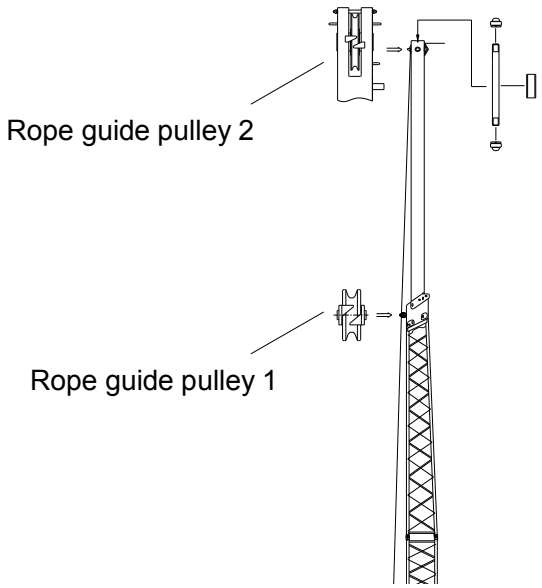

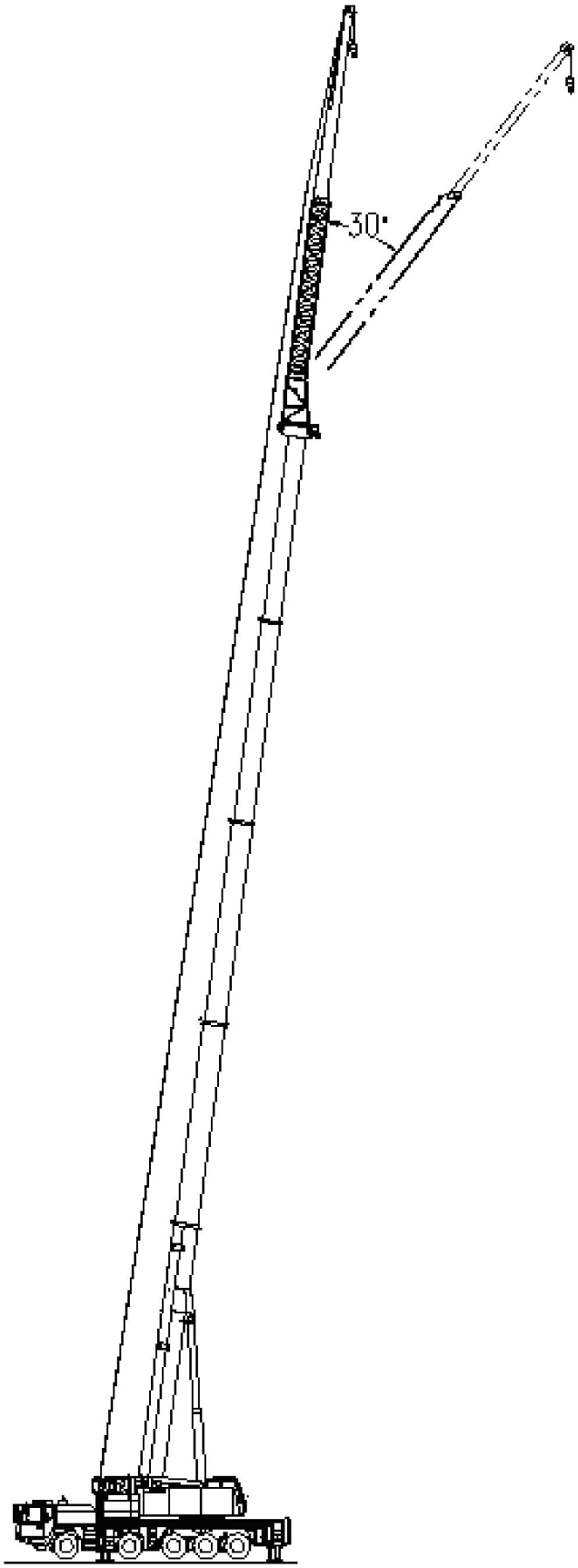
30°

5.3 Rooster sheave

Rooster sheave consists of bracket, rope pulley shaft, pulley and pins. It should be dismantled before driving.

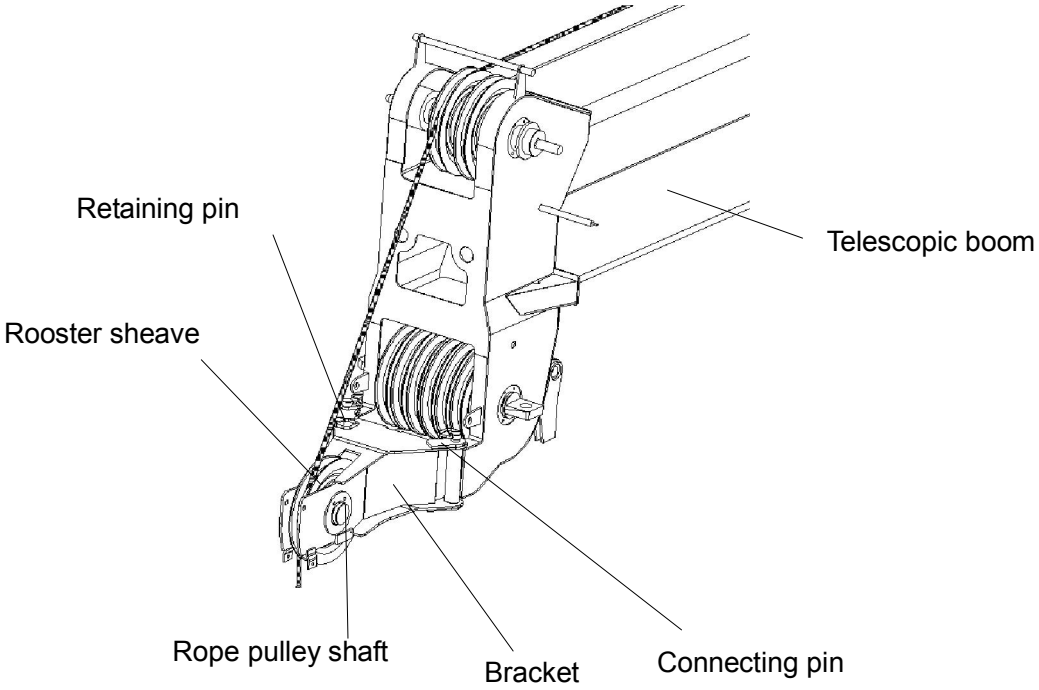

Rooster sheave is set up for rapid hoists over the boom nose to improve the working efficiency when the loads are light.

5.3.1 Assembly

a) Derrick down the telescopic boom to the rear or the side to its minimum angle;

b) Release the retaining pin and turn the boom nose until connecting pin can be bolted at point A;

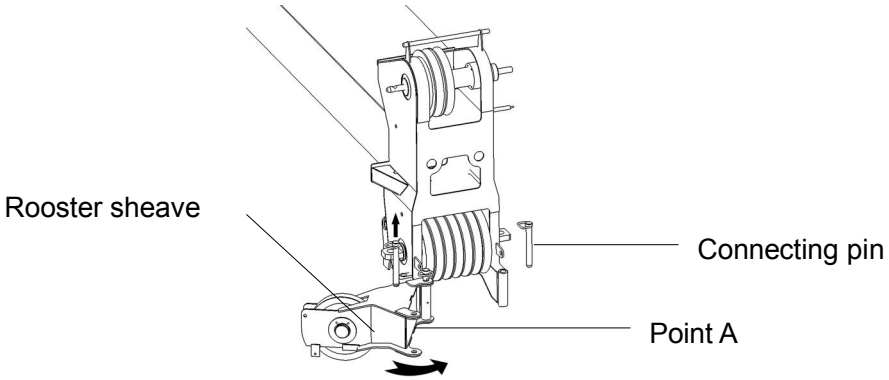

c) Run auxiliary hoist rope over rooster sheave; reeve in auxiliary hook and attach hoisting limit switch. Check the assembly and ensure all connections are reliable.

5.3.2 Dismantling

Dismantle the rooster sheave in reverse sequence of assembly process and store it in a proper place or place it on a special vehicle for transportation.

5.4 Assembly of auxiliary winch

The auxiliary winch is not attached to the crane in driving condition. It is attached to the tail of slewing table with pins when it is to be used.

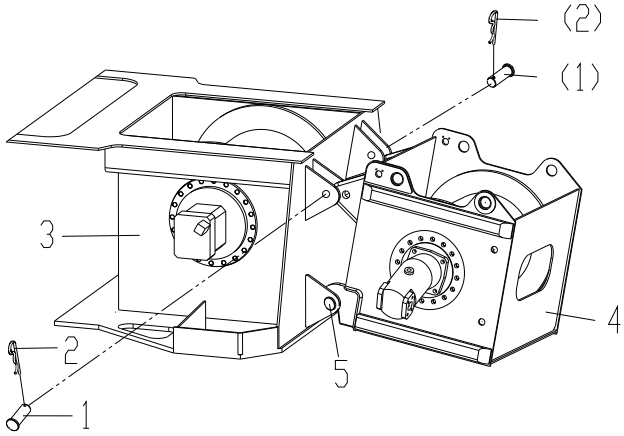

1	Pin	2	β pin	3	Slewing table tail
4	Auxiliary winch assy.			5	Pin

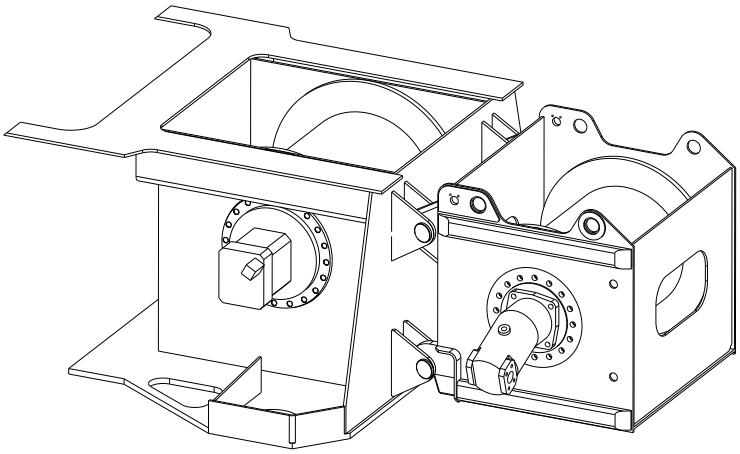

Assembly process:

1) Lift the auxiliary winch assy. and put the auxiliary winch onto the pin 5;

2) Adjust auxiliary winch until the holes in auxiliary winch and the slewing table are flush;

3) Bolt in pins 1 on both sides and secure with pins 2;

4) Connect the hydraulic pipe of motor with quick fitting.

Disassemble the auxiliary winch in the reverse sequence of above steps.

5.5 Counterweight

5.5.1 Counterweight and its assembly & disassembly mechanism

The counterweight consists of two 7.5t counterweight plates.

Total weight: 15t

3 variants:

- No counterweight
- 7.5t counterweight
- 15t counterweight

The assembly / disassembly mechanism of counterweight consists of 2 counterweight cylinders and auxiliary elements. See the following illustration:

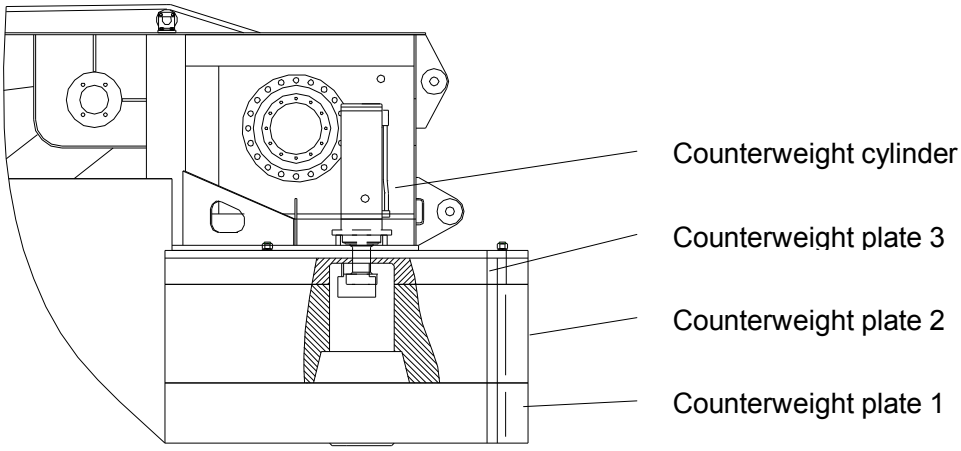

Counterweight (t)	Combination	Individual weight (t)
0	-	-
7.5	Counterweight plate 1	7.5
15	Counterweight plate 1 Counterweight plate 2	7.5 7.5

Danger:

Attach counterweight in accordance with the above table! Otherwise, the crane may topple!

5.5.2 Assembly

a) Properly support the crane and level the crane horizontally;

b) Retract the counterweight cylinder fully;

c) Ensure that there is no personnel and equipment within slewing radius to ensure their safety;

d) The slings should have sufficient strength;

e) Attach counterweight plate 1 on the centering cones of the chassis frame by the crane itself;

f) Deposit the required counterweight plates on the counterweight plate 1;

g) Turn the right switch to right position;

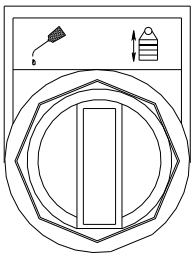

Switch – Central lubricating system/ extending or retracting counterweight cylinder

h) Plug the counterweight remote control box to carry out the following steps;

i) Turn the slewing table leftwards until the counterweight cylinder is even with the openings in the upper position of the counterweight plates.

The counterweight cylinders are now located next to the openings of the counterweight plates;

j) Fully extend the counterweight cylinder;

k) Turn the slewing table until the counterweight cylinder is inserted into the mountings of counterweight plate 1 ;

The counterweight cylinders are now located in the mountings of counterweight plate 1;

l) Retract counterweight cylinders until the counterweight plates are lifted to proper position.

Danger:

The counterweight can only be transported with special dolly; otherwise the axles may be damaged by excessive axle load.

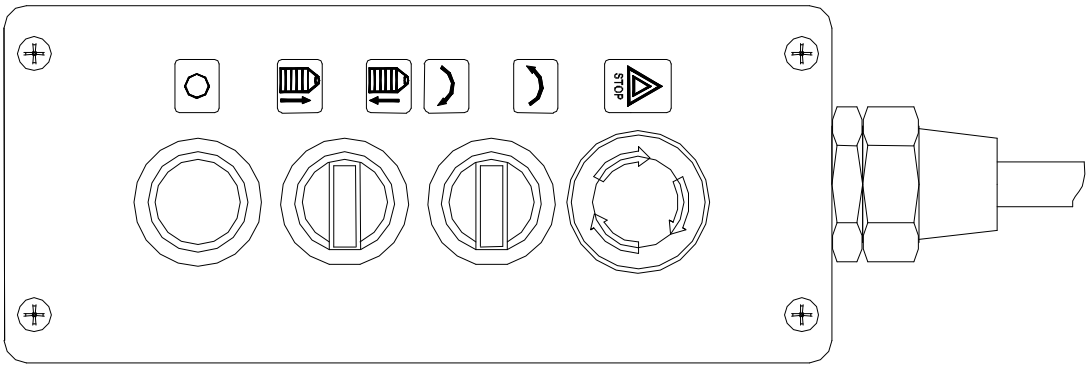

Switches and control light on the counterweight remote control box:

① Emergency stop button

Icon

Pressed in emergency status:

- The power source of counterweight remote control box is cut off.

Turn the button according to arrow direction:

- The crane is switched to normal operation condition.

② Switch Slew to the left

Icon

Turn the switch to upper position:

- The superstructure slews to the left slowly.

③ Switch Slew to the right

Icon

Turn the switch to lower position:

- The superstructure slews to the right slowly.

④ Switch Extend counterweight cylinder

Icon

Turn the switch to upper position:

- The counterweight cylinder extends slowly.

⑤ Switch Retract counterweight cylinder

Icon

Turn the switch to lower position:

- The counterweight cylinder retracts slowly.

⑥ Power source control light

Icon 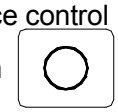

Turn the switch “Central lubricating system / extending or retracting counterweight cylinder” to right position and switch off the emergency stop button:

- The control light lights up.

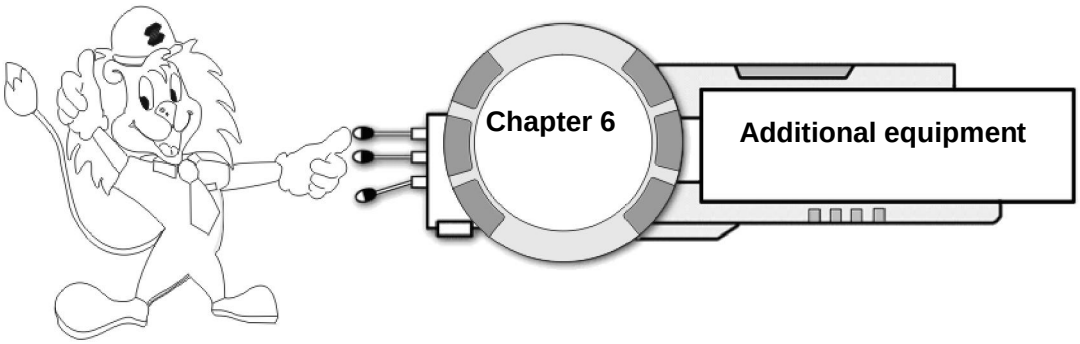

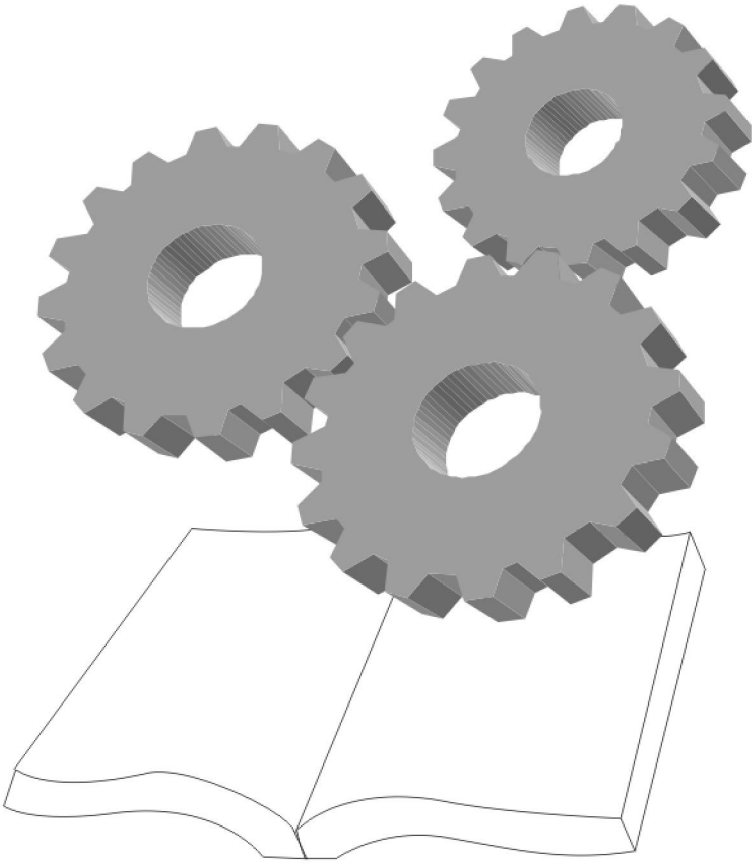

ZOOMLION

6.1 Air conditioning in driver's cab

In order to provide a comfortable driving environment, driver's cab of our crane is equipped with an air conditioning and a heater.

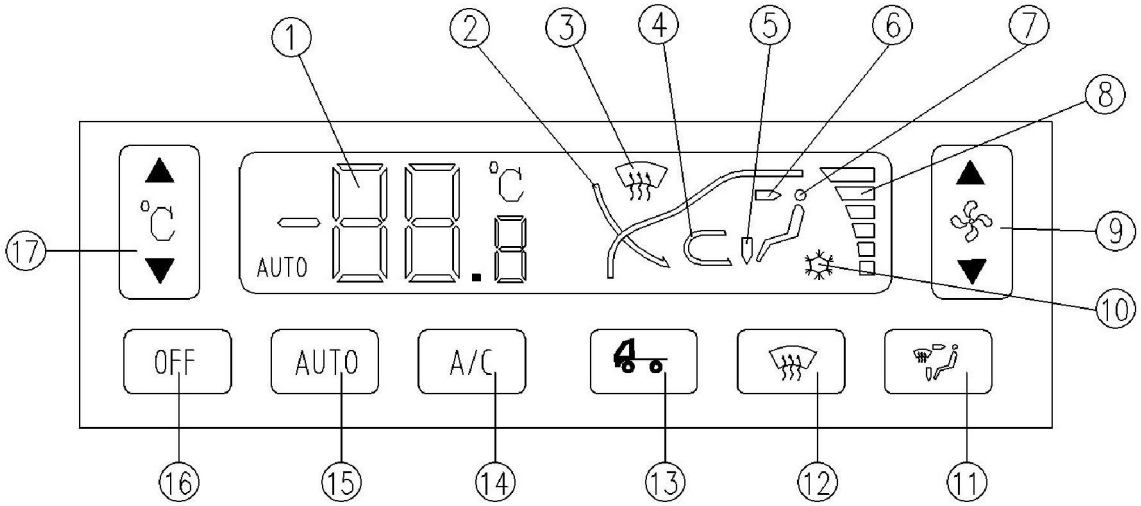

1. Temperature
   Interior temperature range: -30.0℃ to 80.0℃
   If the interior temperature sensor is defective, 25.0℃ will be displayed and never changed.

2. Outer air circulation

3. Defrosting

4. Interior air circulation

5. Footwell air supply

6. Front window air supply

7. Front window air supply

8. Fan speed bar chart:
   1 bar – 1 stage, 2 bars – 2 stages, 3 bars – 3 stages,
   4 bars – 4 stages, 5 bars – 5 stages, 6 bars – 6 stages

9. Fan speed button
   Arrow up – fan speed (blower), faster
   Arrow down – fan speed (blower), slower

Note:

If the fan speed button is not activated, “Arrow up” and “Arrow down” are invalid.

If the fan speed button is activated, press “Arrow up” and “Arrow down” to increase / decrease the fan speed.

If the fan speed is increased or decreased to the highest or lowest degree, “Arrow up” and “Arrow down” are invalid.

10. Refrigeration

11. Mode button
    Changeover front window air supply / footwell air supply/ footwell and defrosting

12. Defrosting button
    Activate this button: enter into defrosting mode

13. Circulation button
    Switch between interior air circulation and outer air circulation.

14. A/C button
    Press this button, compressor is activated and refrigeration control light lights up; Press this button again, compressor is deactivated and refrigeration control light goes out.

15. AUTO button
    Press AUTO: auto running mode is activated.
    Press AUTO again, or press A/C, Defrosting button: exit auto running mode.

    Interior air circulation is the default auto running mode which can be adjusted manually.

16. OFF button
    Press this button to turn off air conditioning system.
    Press any button (except OFF) to activate air conditioning system.

17. Temperature adjustment button
    Temperature range: 17℃ to 29℃.

    Press this button and the temperature is increased or decreased by 1℃ between 17℃ and 29℃.

    Press this button and hold it, the temperature will be continuously increased or decreased.

    The set temperature will flash and the interior temperature will appear on the display after 5 seconds.

LO: set temperature below 17℃
HI: set temperature above 29℃

The air conditioning system is of diagnosis function.
● Press and hold OFF.
● The error codes will appear on the display after 10 seconds.

C0: Normal
C3: The interior temperature sensor uninstalled or defects
C5: The evaporator temperature sensor uninstalled or defects
C6: Water valve steering gear uninstalled or defects
C7: Air door for mode adjustment uninstalled or defects

Warning:

Never use the heater during driving if engine coolant temperature is below 70℃.

Caution:

a. Do not use air conditioning when the engine is stopped or is running at idle speed; otherwise, it will cause excessive battery consumption and thus affect normal driving;

b. If the vehicle continuously drives at low speed, please change to a lower gear to increase the engine RPM. If the vehicle is started suddenly or it is climbing long ascending gradients, please switch off the air conditioning to prevent the engine from overheating;

c. In winter or other periods without using air conditioning, run the air conditioning for several minutes once a month, which can not only be good for the lubricating circulation, but also keep the system in good state;

d. Check refrigerant regularly. If there is no or not enough refrigerant, add it timely;

e. If there are abnormal vibration, noise or smell during operation, stop and examine the machine immediately. Never run with faults;

f. Clean the surface of condenser regularly. Do not clean it with steam. Clean it with compressed air or cold water;

g. Never dismantle the belt or pipeline of compressor after using the air conditioning;

h. In summer, close the shutoff gate valve on the hot-water pipe of heater;

otherwise refrigeration effect may be affected. However, in winter, open the shutoff gate valve to make hot water enter into the heater. For hot-water type heater, engine coolant temperature will affect the interior temperature. If the engine coolant temperature cannot be heated, the driver's cab will not be warmed.

6.2 Air conditioning in operator's cab

In order to provide a comfortable operating environment for the operator, operator's cab of our crane is equipped with an air conditioning and a heater, which can refrigerate in summer and supply heat in winter. The working medium of refrigeration is HFC134a, and working medium of heat supply is engine circulating cooling water.

6.2.1 System technical data

1	Refrigerating output	4000W
2	Heating output	5000W
3	Air supply output	600m^3/h
4	Voltage	24V.DC
5	Gross current consumption power	≤310W
6	Refrigerant oil	Depend on compressor
7	Refrigerant	R134a
8	Refrigerant reserve	1200g±150g

6.2.2 Operating methods

1. Functions of rotary switches:

A. Rotary switch - fan speed:

Using this switch to control the fan speed (4 stages - HI, MID, LOW, OFF) of evaporator motor;

Using this switch to choose appropriate fan speed and switch on / off the system.

B. Rotary switch - refrigeration:

Using this switch to switch on / off the refrigeration mode.

C. Control lights:

Refrigeration control light lights up: compressor starts and refrigeration system is in working mode.

Power control light lights up: the system is in ventilation mode.

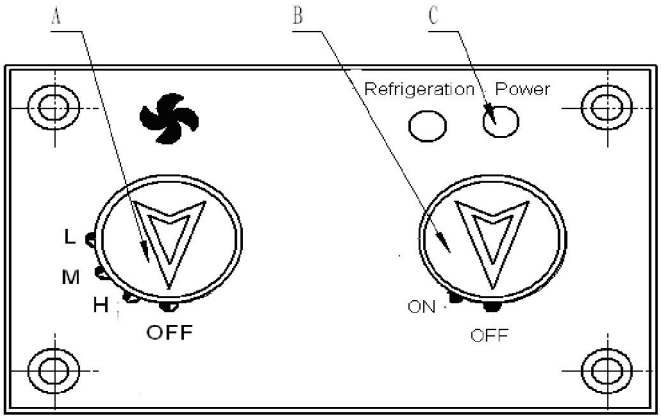

Illustration - Air conditioning operating panel

2. Operating instructions:

A. Refrigeration

- Set switch B to ON position;
- Switch on switch A;
- Control light lights up and air conditioning begins to work.

B. Heating

- Set switch B to OFF position;
- Switch on switch A;
- Open the hot-water valve;
- The heater begins to work.

C. Ventilation

- Set switch B to OFF position;
- Switch on switch A.

Adjusting the direction of outlet nozzle can change the angle and direction of cold wind.

Regulate switch A to obtain 3-stage fan speed: HI, MID, LOW.

Caution:

a. Under the idle-speed working condition, the use of air conditioning would cause excessive consumption of battery, at this time, set the fan speed switch to LOW and increase the idle speed;

b. The heating system is connected with water tank via a valve. When the ambient temperature is below 0℃, add antifreeze fluid into the system to prevent brass pipe of radiator from freezing within -30℃.

6.2.3 Points for attention:

1. Do not remove any part of the air conditioning to prevent refrigerant from leaking;
2. Check tightness of the belt regularly to prevent it from over-tightening and over-loosening;
3. Antifreeze fluid has been added into water pipe lines with proper proportion before the crane is handed over, and the system circulation has been carried out for no less than 15min to prevent the heating pipelines from freezing under low temperature;
4. In summer, check whether the hot-water valve is closed before running air conditioning. Hot-water valve in the heating pipelines can only be switched on in winter;
5. Clean accumulated dirt on the surface of condenser to prevent the refrigeration effect from being affected;
6. Check and tighten the connections of pipelines in air conditioning system to prevent them from loosening and leaking after using for a long period;
7. Add refrigerant fluid after replacing the parts.

Name of parts	Quantity of refrigerant fluid (CC)
Condenser	40-50
Evaporator	40-50
Hose for refrigeration circle	10-20
Fluid reservoir	15-25

6.2.4 Troubleshooting

A: Refrigeration fault

<table>
<tr><td rowspan="6">Refrigeration fault</td><td rowspan="3">Evaporator fan motor is working</td><td rowspan="2">Condenser fan motor is not working</td><td>Compressor is working</td><td>Check fittings of fan motor for tight connection and fan motor for damage. Check if compressor is grounded well.</td></tr>
<tr><td>Compressor is not working</td><td>Check temperature control switch for damage. Check if relay is switched on, and terminal connector of relay is tightly fitted.</td></tr>
<tr><td>Condenser fan motor is working</td><td>Compressor is not working</td><td>Check clutch for damage, check terminal connector for tight connection and check belt for tightness and sliding.</td></tr>
<tr><td rowspan="2">Evaporator fan motor is not working</td><td>Condenser fan motor and compressor are working</td><td colspan="2">Check fan speed switch for malfunction, check fan motor wire for connection and grounding wire of fan motor for normal connection.</td></tr>
<tr><td>Condenser fan motor and compressor are not working</td><td colspan="2">Check whether the fuse is broken, check relay for normal working and check connecting wire for tight fit.</td></tr>
<tr><td rowspan="2">Compressor is working</td><td rowspan="2">Evaporator fan motor and condenser fan motor are all working</td><td colspan="2">HFC134a is filled too much into the system. Check whether the required pressure is reached with a high/low pressure gauge.</td></tr>
<tr><td colspan="2">Check whether HFC134a remains in the system with a high/low pressure gauge.</td></tr>
</table>

Insufficient refrigerating output	Compressor is working	Evaporator fan motor, condenser fan motor, evaporator and condenser are all working.	Inlet / outlet of fluid reservoir are connected in reverse. Check whether expansion valve is blocked with ice or dirt. If it is, replace fluid reservoir. Replace HFC134a.
		Fan motors and other devices are working	Check whether the surface of condenser is blocked with dirt.

B: Heating fault

Heating fault	Evaporator fan motor is working	Check whether solenoid valve is switched on. Check whether other valves fitted on the heating pipelines are closed.
	Evaporator fan motor is not working	Check fan speed switch for malfunction, check fan motor wire and grounding wire for normal connection. Check whether the fuse is broken and check connecting wire for tight fit.

C: Remedies for other troubles

	Problem	Possible causes	Remedy
1	Refrigerating effect of the system is good at the beginning, but refrigerating output is not enough after using for a period of time. Bubbles appear in the inspection hole of fluid reservoir; and "readings" shown in the high/low pressure gauge are lower.	Since the vehicle often drives in off-road condition, the fitting has come to loose, thus incurring leakage.	Find out the leaking point with a leakage examining instrument and tighten the loosened parts carefully.
2	Refrigeration does not work; outlet nozzle blows hot air; no temperature difference between the inlet and outlet of expansion valve and the reading shown in the low-pressure gauge is extremely low.	Improper use. Temperature-sensitive capsule of expansion valve is worn and leaks, which makes valve hole closed.	Replace expansion valve, and refill HFC134a.
3	The air from outlet nozzle is not cold enough, and the temperature of compressor increases. The reading in the low-pressure gauge descends rapidly (approaches to "0"), but the reading in the high-pressure gauge is higher.	The system is mixed with impurities; the filtering screen of expansion valve is blocked and thin frost appears at expansion valve.	Open air conditioning system intermittently to eliminate instantaneous blocking if blocking is not serious. Or dismantle expansion valve to wash it with alcohol, and refill HFC134a after deaerating the system.
4	Refrigerating output is not enough, and evaporator is frosted; readings in the high/low pressure gauge are all lower.	Throttle bore inside the expansion valve does not function.	Deaerate the system, replace expansion valve and refill HFC134a.

	Problem	Possible causes	Remedy
5	Refrigerating output of the system descends gradually after the system is running for a period of time. The readings in the high pressure gauge are higher but the readings in the low pressure gauge are lower than 0.4Mpa.	Drying agent in fluid reservoir is saturated, and throttle point in expansion valve is blocked with ice.	Deaerate the system, replace fluid reservoir, and refill HFC134a.
6	After opening the air conditioning system, only air (not cooling air) blows and the readings in high/low pressure gauge do not vary.	Temperature control switch is poorly connected; Or electromagnetic clutch coil for compressor is damaged.	Use universal meter to check temperature control switch for damage; Replace electromagnetic clutch for compressor.
7	Electromagnetic clutch for compressor is frequently operative but short-time engaged. The cab cannot be cooled down but the readings in high/low pressure gauge are normal.	The compressor stops running automatically caused by excessively small opening degree of temperature control switch, so refrigerating output is insufficient.	Check temperature control switch and set it to the Max. degree (Cold).

6.3 Emergency control

6.3.1 Emergency operation – crane superstructure

6.3.1.1 General

1. Emergency operation of the crane superstructure may only be carried out in the following situations:
   - To remove a dangerous situation;
   - After consultation with our service department;
   - To carry out load reducing movements.

2. The danger zone must be blocked off.

3. No persons or objects may remain in the danger zone!

4. If a load is on the hook, then it must first be set down to relieve the boom.

5. In the event of a defect or failure of load moment limiter, each step must be carried out and monitored with extreme caution and care, since a visual check on the load moment limiter is no longer possible. Visual check!

6. All crane movements must be carried out with extreme caution.
   - The crane operator must be in visual contact with the second person.

Danger:

There is an increased risk of accident if the above danger notes are not observed! Observe general risk information!

Warning:

In order to carry out emergency operations, the engine must be running and the hydraulic system of the superstructure must function normally. If above requirements cannot be achieved, equipments of the crane must be taken down using an auxiliary crane. The boom may only be derricked down if stability of the crane can be ensured.

6.3.1.2 Emergency operation – crane movements "Slewing, Derricking, Spooling up / reeling off main / auxiliary winch"

In the event that the electrical controls of the control system solenoid valve fail, these movements can be manually operated by pressing in the electromagnet core on the corresponding solenoid valve.

Caution:

Press down electromagnet core of directional control valve with pointed objects e.g. nail and pen tip. After pressure is stopped, the crane movement will stop immediately.

Danger:

As the opening degree of electro-hydraulic proportional valve cannot be controlled when electromagnetic core is pressed down manually, the operation must be carried out with extreme caution to prevent accidents.

Preconditions: the superstructure engine must be running normally;
the hydraulic system of the superstructure must be functional.

Functions	Brake valve			Directional control valve
	Y10 (Slewing)	Y13 (Main winch)	Y14 (Auxiliary winch)	
Slewing left	1	0	0	Y5a
Slewing right	1	0	0	Y5b
Derricking up	0	0	0	Y3a
Derricking down	0	0	0	Y3b
Spooling main winch up	0	1	0	Y1a
Reeling main winch off	0	1	0	Y1b
Spooling auxiliary winch up	0	0	1	Y2a
Reeling auxiliary winch off	0	0	1	Y2b

Time-sequential table - Emergency operation of solenoid valves (Superstructure)

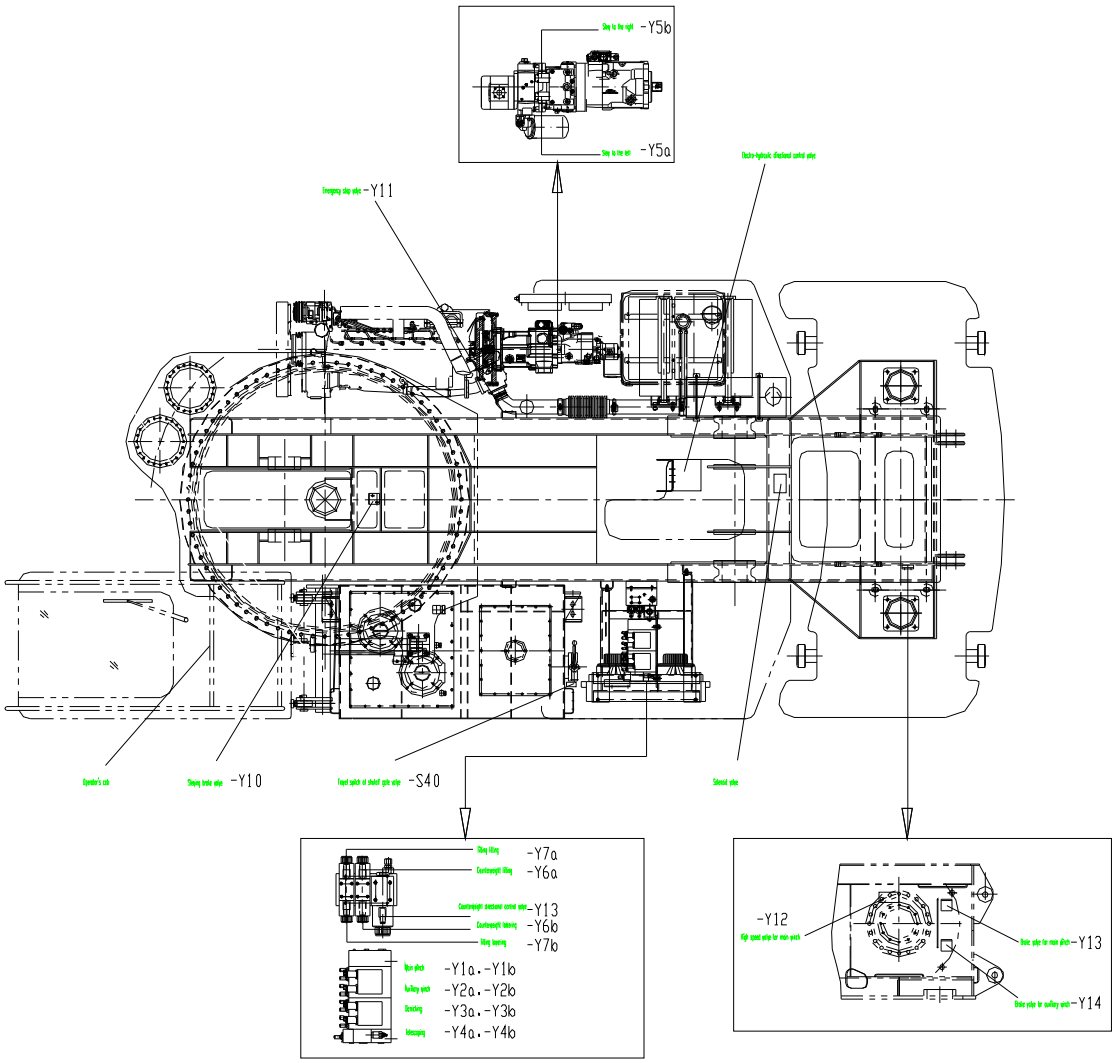

Illustration - Arrangement of solenoid valves in emergency operation (superstructure)

Note:

For emergency operation, please refer to Time-sequential table of Emergency operation of solenoid valves (superstructure) and arrangement of solenoid valves in emergency operation (superstructure).

As illustrated in the Time-sequential table, to carry out emergency operation of crane movements “Slewing” and “Spooling up / reeling off winches”, the operator only to actuate corresponding brake valves, but the emergency operation of crane movement “Derricking” is an exception.

If the winches attached with load cannot carry out any movement, open the Y12a, Y12b, Y14a and Y14b for a few minutes to supply hydraulic oil to the winches (open valve “a” for 8 seconds at first, and then open valve “b” for 8 seconds. Repeat the process for 10 times), so as to prevent the hook from falling down (it is supposed to lift).

The emergency operations of tilting operator's cab and lifting counterweight can be operated by the manual control levers on their corresponding control valve blocks.

6.3.2 Emergency operation – crane chassis

6.3.2.1 Emergency operation - outriggers

In the event that the electrical controls of the outrigger solenoid valve fail, the outrigger can be manually retracted and extended by pressing in the electromagnet core on the corresponding solenoid valve.

Outrigger cylinder	Functions	Changeover valve Y1 and Y2 for oil circuit of outriggers	Directional control valve
Vertical cylinder	Retracting left front Retracting right front Retracting left rear Retracting right rear	1	Y2a Y6a Y4a Y8a
Horizontal cylinder	Retracting left front Retracting right front Retracting left rear Retracting right rear	1	Y1a Y5a Y3a Y7a
Vertical cylinder	Extending left front Extending right front Extending left rear Extending right rear	1	Y2b Y6b Y4b Y8b
The 5th outrigger	Extending left front Extending right front Extending left rear Extending right rear	1	Y1b Y5b Y3b Y7b

Time-sequential table - Emergency operation of solenoid valves (outrigger)

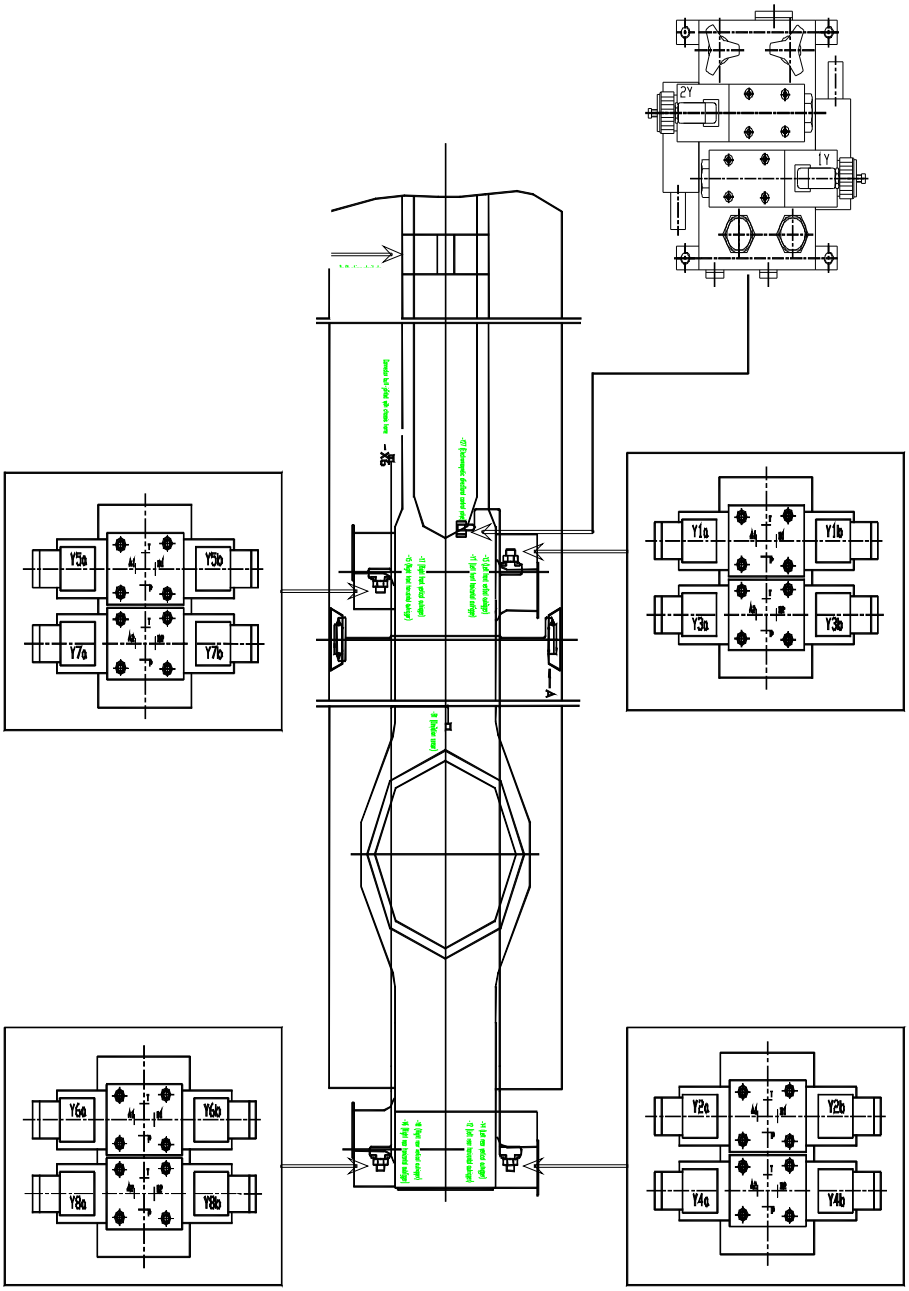

Illustration –Arrangement of solenoid valves in emergency operation (outrigger)

Caution:

The changeover valves Y1 and Y2 must be activated during the operation of outriggers.

6.3.2.2 Emergency brake

If compressed air pressure is excessively low, the brake chamber springs from the 3rd to the 5th axle are actuated, thus making the vehicle in parking brake state.

If you want to move the vehicle compulsorily, the parking brake must be released. Detailed steps are as follows:

- Loosen the nuts at the tail of brake chamber with spanner;
- Screw out the threaded rod for about 2.52 in (64mm).

Positions of spring brake chamber and adjusting nuts for spring are illustrated in the following diagram.

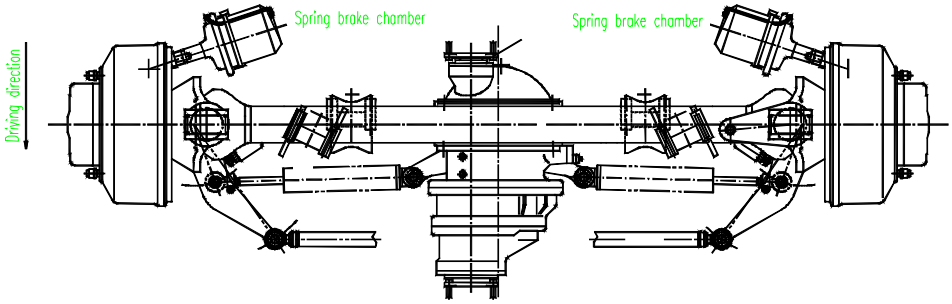

Adjusting nuts at the tail of brake chamber

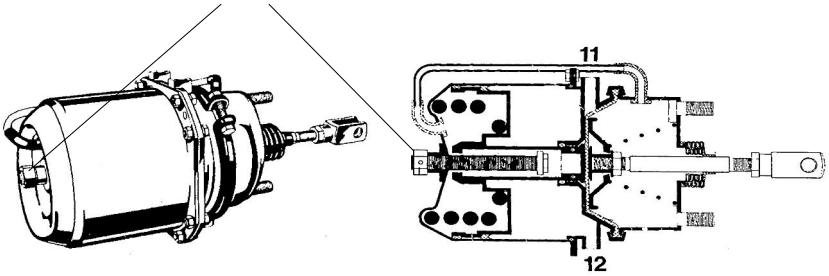

Warning:

Once air source is supplied or the faults are rectified, screw in the threaded rod timely; otherwise, parking brake will not be in function.

Danger:

Force of spring under working conditions is about 1764lb (800kgf); therefore, dismantling must be carried out with extreme caution and care, and it must be done by professionals.

6.4 Interphone

Considering the requirements for commanding the operation of large-size crane, our product is equipped with a pair of interphones which are optional.

6.4.1 Notices for users:

(1) Do not use the radio interphones illegally;

(2) Maintenance can only be carried out by professional technicians;

(3) Do not modify the interphones under any circumstances;

(4) Do not put the interphone directly in the sun for a long time, and do not place it near heating devices;

(5) Do not put the interphone in dusty, moist, water-splattered areas and on uneven surfaces;

(6) Once the interphone sends out unpleasant smell or smoke, please cut off the power immediately and remove its battery group (optional). And then contact the seller.

Warning:

Please turn off the interphone power in potentially explosive atmospheres (such as gas, dust and smoke), or when the crane is refueling or parking at gas station.

6.4.2 Familiar with the interphone

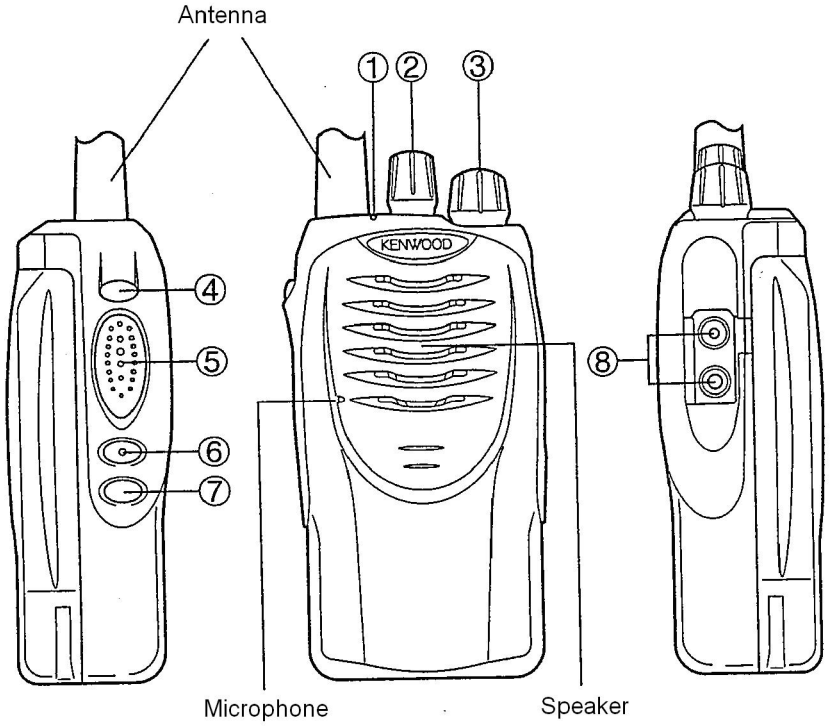

1. LED control light

   Red light lights up: sending signals;

   Green light lights up: receiving signals;

   Amber light flashes: receiving dual tone, DTMF or FleetSync signals;

   Red light flashes: low voltage of battery when sending signals

2. Channel switch

   Switch over the switch to select channels (from 1 to 16).

3. Power / volume knob

   Turn the power / volume knob clockwise until it clicks to switch on the interphone.

   Rotate it to adjust the volume.

   Turn it counterclockwise until it clicks at the OFF position to switch off the interphone.

4. AUX (auxiliary) key

   This is PF (programming function) key.

   Press this key to start auxiliary function (lower part).

Default setting of this function is null.

5. PTT (push-to-talk) switch
   Hold down this switch to call other party through microphone.

6. Side push-key 1
   This is PF (programming function) key.

   Press this key to start auxiliary function (lower part).

   Default setting of this function is null.

7. Side push-key 2
   This is PF (programming function) key.

   Press this key to start auxiliary function (lower part).

   Default setting of this function is to cancel static noise instantaneously.

   Press this key to open static noise, so as to tune in week signal and background noise.

   Release this key to return to normal mode.

8. Speaker / microphone jack
   An optional speaker / microphone can be connected into the jack.

6.4.3 Auxiliary programming function

Auxiliary key, side push-key 1 and side push-key 2 can be programmed into the following auxiliary functions:

1. Dual tone code

2. Emergency call*

3. Instantaneous sound monitoring

4. Null

5. RF low-power

6. Scanning

7. Canceling scanning temporarily

8. Encryptor

9. Canceling static noise instantaneously

10. Canceling static noise intermittently

* This function can only be programmed on the AUX (auxiliary) key.

For specified operating methods of this programmable function, please refer to *Operating Manual of Interphone* provided by manufacturer.

6.4.4 Fundamental operations

1. Switching power on / off

   Turn the power / volume knob clockwise until it clicks to switch on the interphone, and turn the knob counterclockwise to switch off the interphone.

2. Adjusting the volume

   Turn the power / volume knob after switching on the interphone to adjust the volume. Turn the knob clockwise to increase the volume and turn it counterclockwise to decrease the volume.

Note:

You need to readjust the volume when you are on the phone.

3. Selecting the channel

   Turn the channel knob to select channels (from channel 1 to 16) as you expected. Turn the knob clockwise to increase the channel number and counterclockwise to decrease it. If the channel has not been programmed, it cannot be used. When un-programmed channel is selected, red and amber LED control lights will flash and alarming sound will be sent out.

4. Making a call

   a. Make sure that no one else is talking on the channel that you select.

   b. Hold down the PPT switch and speak in normal tone through the speaker. In order to make the other party receive the best audio frequency, please speak in a distance of 1.5 inches (3-4cm) from the speaker.

   c. Release PTT switch to receive.

5. Receiving a call

   The seller has probably programmed on your interphone with signals of QT, DQT, dual tone or FleetSync. If the channel you select has been programmed with one of the above signals, you can catch the sound only when there is call of matched signal in your channel. Other calls will not be heard.

   If the channel you select is not set with signal type, you can hear calls from any parties (not limited in the group in which you are participating).

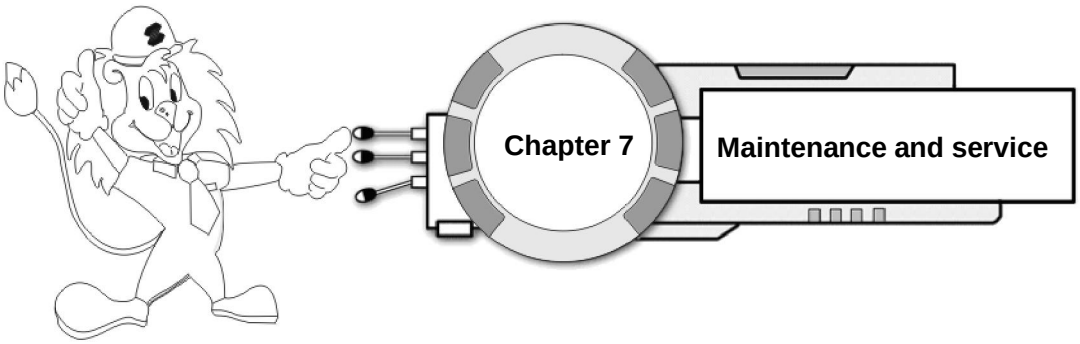

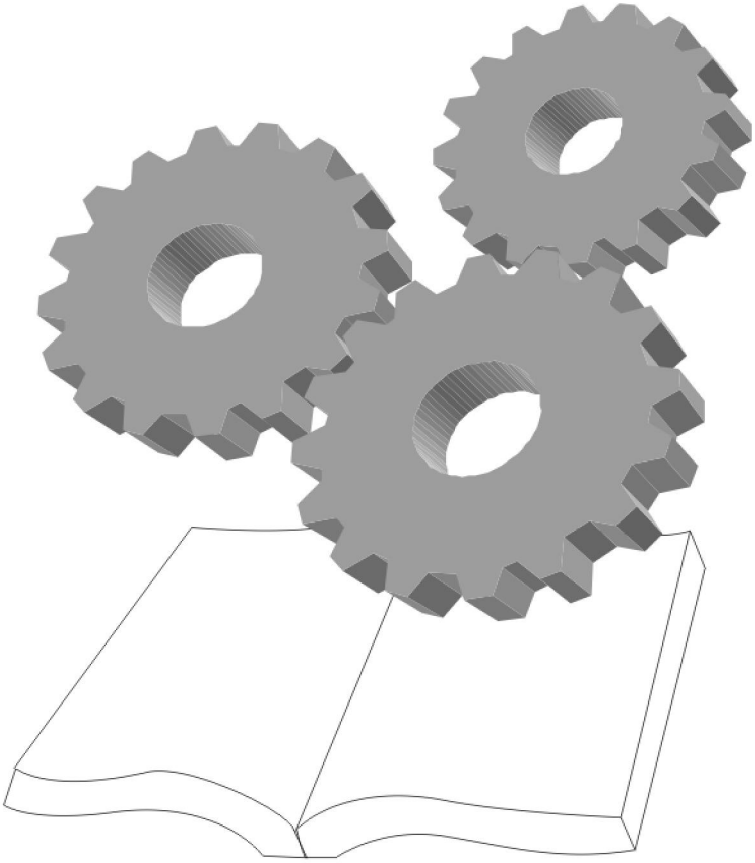

ZOOMLION

7.1 General

Products and “After Sales Service” team of ZOOMLION are most reliable for you!

ZOOMLION’s cranes are technically advanced products, which prove their capacity with long working hours under exacting conditions. The high technical standards of these cranes provide functional security, resistance to failure, convenient and economical operation and easy maintenance.

We use globally-supported components. The combination of well proven units and modern manufacturing methods produces cranes that are safe to operate and easy to maintain.

Our cranes are built for the international market and also supported by international service.

ZOOMLION's “After Sales Service” plays an important role in ensuring the operational readiness and high availability of the cranes.

At ZOOMLION, service begins when the crane is handed over. Your crane operators will be professionally trained in line with their level of knowledge.

Our after-sale service is provided for you in a timely fashion. Once irregularities occur in our products, the customer can directly call us by the service line, while our experienced technicians who have special knowledge and special tools will provide satisfactory service for the customer.

Caution:

Please use original ZOOMLION parts. In the event that non-original ZOOMLION replacement parts are used, we disclaim all liability, both for system functionality and the replacement parts.

7.2 Cleaning and care of the crane

Clean the crane with water.

Caution:

Steam cleaners should be used with extreme caution, always maintain at least 800cm distance from the steam jet to the painting surface and to the thin-film label and use appropriate water temperature of no more than 60℃.

Grease all the kinematic pair, e.g., universal propeller shaft and slewing ring of the crane, after cleaning, especially cleaning with steam cleaners.

The steering wheel, control panel, floor and dirty upholstery in the driver's cab should only be cleaned with warm water mixed with a little dish washing liquid.

Do not use any scouring agents.

7.3 Maintenance intervals

Please refer to the following chapters when performing maintenance of the crane:

- Chapter 7.3.1 Maintenance intervals - crane chassis
- Chapter 7.3.2 Maintenance intervals - crane superstructure

Maintenance tasks should be carried out in accordance with maintenance contents and actual operating conditions for crane.

For individual units, the manufacturer's instructions must be observed.

The maintenance tasks on the crane chassis are carried out based either on operating hours or by kilometers traveled.

The maintenance tasks on the crane superstructure are carried out entirely on operating hours.

7.3.1 Crane chassis maintenance and inspection plan

	First main-tenance after	Regular maintenance, every			Mini-mum main-tenance annual	Checks	
		200 h or 5000 km	400 h or 10000 km	800 h or 20000 km		Daily	Weekly
★Diesel engine							
a. Check oil level For all other maintenance tasks, follow the instructions of the engine manufacturer						●	
b. Replace engine oil filter					●		
c. Replace engine oil	25000 km			Every 500h or 25000 km	●		
d. Check coolant level and add coolant						●	
e. Replace coolant					Every 2 years		
★Air filter							
a. Check monitoring device						●	
b. Clean filter		Dirty but not damaged			When necessary		
c. Replace filter					When necessary		
★Transmission							
a. Check oil level					Every 6 months		
b. Check for leaks							●
c. Check or tighten bolts and nuts	100 km	●					
d. Oil change					240,000km, but at least once every 2 years		
e. Clean oil drain plug and replace seals		When removing the plug					

	First main-tenance after	Regular maintenance, every			Mini-mum main-tenance annual	Checks	
		200 h or 5000 km	400 h or 10000 km	800 h or 20000 km		Daily	Weekly
★Steering							
a. Check oil level of hydraulic tank							●
b. Observe monitoring device of pressure filter						●	
c. Clean pressure filter					When necessary		
d. Check that steering linkage, rocker arm, steering booster cylinder are firmly attached, check cotter pin	100km	●					
e. Check hydraulic steering system for leaks						●	
f. Check position of tie rods and adjust position of tires		●					
g. Oil change			●		●		
h. Replace filter cartridge of oil tank				●			
i. Check steering limit screws of axle, adjust if necessary				●			
j. Check hydraulic pressure, readjust if necessary				●			
k. Check toe-in of axles, adjust if necessary			●				

	First main-tenance after	Regular maintenance, every			Mini-mum main-tenance annual	Checks	
		200 h or 5000 km	400 h or 10000 km	800 h or 20000 km		Daily	Weekly
★ **Propeller shaft and bearing seat**							
a. Check lubricating grease		5000km					
b. Check flange bolts, intermediate bearing bolt and tighten them if necessary	100km	2500km					
★ **Transfer case**							
a. Check oil level							●
b. Oil change	5000km		●				
c. Check for leaks							●
d. Check or tighten mounting bolts	100km	●					
e. Check road /off-road gear transfer function							●
f. Check that the radiator and oil pipe fittings are firmly attached	100km						●
g. Clean deaerating nipple				●	●		
h. Have tachograph checked		●					

	First main-tenance after	Regular maintenance, every			Mini-mum main-tenance annual	Checks	
		200 h or 5000 km	400 h or 10000 km	800 h or 20000 km		Daily	Weekly
★ **Axle, driven**							
a. Check for leaks						●	
b. Oil level checks at axle reducer, differential housing and wheel hubs		●					
c. Grease steering knuckle bearings			10000km		●		
d. Check attachment		●					
e. Oil change	1000km		10000km		●		
f. Clean deaerating nipple at axle housing				●	●		
g. Adjust wheel bearings				●	●		
h. Check transversal / longitudinal differential lock for function							●
★ **Axles, non-driven**							●
a. Grease steering knuckle bearings			10000km		●		
b. Check attachment		●					
c. Replace wheel hub grease filling			●		●		
d. Adjust wheel bearings				●	●		

	First main-tenance after	Regular maintenance, every			Mini-mum main-tenance annual	Checks	
		200 h or 5000 km	400 h or 10000 km	800 h or 20000 km		Daily	Weekly
★ Tires							
a. Ensure that wheel nuts are tight, re-tighten if necessary	1000km		●				
b. Check the tire pressure							●
★ Air pressure system							
a. Check for leaks							●
b. Check operating pressure of brake system						●	
c. Check cut-off pressure						●	
d. Drain air pressure tank		●					
e. Replace air drier granular cartridges					●		
f. Clean air drier preliminary filter					●		
★ Brake system							
a. Check brake lining thickness		●					
b. Adjust brakes if necessary, replace linings if required		●					
c. Check operation of parking brake and service brake					●	●	

	First main-tenance after	Regular maintenance, every			Mini-mum main-tenance annual	Checks	
		200 h or 5000 km	400 h or 10000 km	800 h or 20000 km		Daily	Weekly
★Hydro-pneumatic suspension							
a. Check hydraulic tank fluid level							●
b. Check hydraulic system for leaks							●
c. Perform function test		●					
d. Replace filter of hydraulic tank				●			
e. Check hydraulic pressure, adjust if necessary				●			
f. Check accumulator pretension pressure (nitrogen)				●	●		
g. Oil change			●		●		
h. Check mounting and tightening conditions of suspension cylinder			●				
i. Check mounting and tightening conditions of thrust rod			●				
★Hydraulic pump							
a. Check for leaks							●
b. Check screws for proper seating		●					
c. Lubricate bearings				●	●		

	First main-tenance after	Regular maintenance, every			Mini-mum main-tenance annual	Checks	
		200 h or 5000 km	400 h or 10000 km	800 h or 20000 km		Daily	Weekly
★ **Electrical system**							
a. Check vehicle lighting for correct operation						●	
b. Check cable connections and electrolyte (battery acid) levels							●
★ **Fuel system**							
a. Check for oil leaks						●	
b. Check condition and mountings			●		●		
c. Drain off water and sediments			●		●		
d. Clean fuel pump preliminary filter			●		●		
★ **Outriggers**							
a. Check hydraulic system for leaks							●
b. Check hydraulic tank fluid level							●
c. Check ease of movement of sliding beams		●					
d. Lubricate bearings			●		●		
e. Grease the sliding block of sliding beam and fasten the pins		●			●		
f. Adjust telescopic rope and grease			●				

	First main-tenance after	Regular maintenance, every			Mini-mum main-tenance annual	Checks	
		200 h or 5000 km	400 h or 10000 km	800 h or 20000 km		Daily	Weekly
g. Check support control unit, readjust if necessary						●	
h. Oil change				●	●		
i. Replace hydraulic oil filter				●			
j. Check operating pressure of hydraulic system				●			
★ Driver's cab							
a. Check electric appliance for function						●	
b. Check control lights for function						●	
c. Check engine for exhaust brake function						●	
d. Check mounting bolts in operator's cab for tight seating			●				
★Suspension							
Check parts for tightness ,damage and leaks	100km	●					
Check leaf spring for damage		●					
Check cushion block of front suspension for damage	100km		●				
Check the rigid limit block of rear suspension for wear			●				

Note:
These maintenance intervals in above table are indicated in operating hours or kilometers traveled. Apply the maintenance interval that comes first.
The coolant refers to the engine antifreeze & antirust fluid. Please mix it in proper proportion.

7.3.2 Crane superstructure maintenance and inspection plan

	First main-tenance after	Regular maintenance, every				Minimum main-tenance annual	Checks	
		100 h	200 h	400 h	1200 h		Daily	Weekly
★Superstructure engine								
a. Check the oil level For all other maintenance tasks, follow the instructions of the engine manufacturer							●	
b. Check the coolant level in the equalizing reservoir							●	
c. Replace coolant						Every 2 years		
★Air filter								
a. Check monitoring device							●	
b. Clean or change (follow the instructions of the engine manufacturer)								
★Slewing ring connection								
a. Lubricate slewing ring connection						Every 3 months *		
b. Make sure that bolts are tight	200h				●	●		
c. Check tilting free play					●	●		
★Rope winches								
a. Check for leaks							●	
b. Check the oil level								●
c. Check bolts for tight seating	200h			●		●		
d. Oil change					3000h	Every 4 years		

	First main-tenance after	Regular maintenance, every				Minimum main-tenance annual	Checks	
		100 h	200 h	400 h	1200 h		Daily	Weekly
★Rope pulleys								
a. Check, grease if necessary						●		
★Crane ropes								
a. Check, grease if necessary			●			●		
★Hook block								
a. Grease hook			●			●		
★Hydraulic system								
a. Check the oil level							●	
b. Check for leaks								●
c. Replace pressure oil filter	200h			●				
d. Replace return-line filter	200h			●				
e. Replace bleeder filter of hydraulic tank	200h			●				
f. Check hydraulic oil (take oil sample and have it checked by oil supplier)	400h				●	●		
★Hydraulic cylinder								
a. Check for leaks								●
★Electrical system								
a. Check cable connections								●

	First main-tenance after	Regular maintenance, every				Minimum main-tenance annual	Checks	
		100 h	200 h	400 h	1200h		Daily	Weekly
★Operator's cab								
a. Check instruments for function							●	
b. Check control lights for function							●	
★Operator's cab, extendable or inclinable								
a. Check for correct function			●					
b. Lubricate bearings			●			●		
★Load moment limiter								
a. Check working conditions							●	
★Slewing reducer								
a. Check for leaks							●	
b. Check the oil level								●
c. Check bolts for tight seating	200h			●		●		
d. Oil change					4000h	Every 4 years		
★Telescopic boom system								
a. Check telescopic boom for distortions and cracks						●		
b. Check telescopic cylinder for proper condition				●		●		
c. Check the telescoping mechanism for proper condition				●		●		
d. Check locking pins and locking bores for proper condition				●		●		
e. Check inner and outer sliding surfaces for proper condition				●		●		
f. Lubricate the sliding surfaces						●*		

* Carry out a visual inspection before every startup in service.

7.4 Lubrication

7.4.1 Hydraulic oil

The hydraulic oil tanks for crane superstructure and chassis have been topped up with hydraulic oil before delivery.

Oil brands for superstructure: NUTO H32 (for frigid zone)
NUTO H46 (for tropical and temperate zones)

Oil brand for chassis: L-HV32 (GB11118.1-94)

Caution:

The quality, viscosity and cleanness of hydraulic oil are the most key factors for normal operations of the crane.

Ignorance to the changing of hydraulic oil will cause various faults and greatly shorten the service life of the crane.

Our company disclaims all liability for any consequences caused by customer's failing to change or filter oil in accordance with requirements stipulated in this manual.

7.4.1.1 Oil filtering / changing intervals

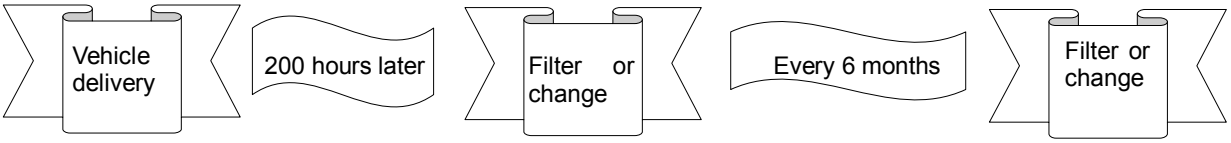

7.4.1.2 Oil changing steps

1) Change hydraulic oil in the hydraulic tank
   - Drain off the hydraulic oil;
   - Remove the master oil return pipe;
   - Clean the oil tank and filter with chemical cleaning agent (solid particle pollution grade ≤18/15) carefully;
   - Wash with new hydraulic oil (solid particle pollution grade ≤ 18/15) after drying;
   - Drain off the washing oil;
   - Add new hydraulic oil.

2) Run the engine at low speed to start the pump and drive the mechanisms (to drain off the original oil in every circuit of the system with new hydraulic oil)

Note:
The original oil is not permitted to return to the oil tank.
Do not stop the oil pump until new oil flows out from the master oil return pipe.
Add new oil continuously into the hydraulic tank to prevent the oil pump from inhaling air.

3) Connect master oil return pipe and oil tank

4) Set each component to initial working state

5) Add hydraulic oil to the required level

Note:
Add oil and deaerate from oil outlet after oil changing to avoid crane abnormal working and damage.

Caution:

a. Filter or change the hydraulic oil immediately once it is polluted seriously;

b. Choose proper hydraulic oil according to the ambient temperature;

c. The hydraulic oil of different brands cannot be mixed;

d. Service life of hydraulic oil must be within 24 months. Otherwise, it cannot be used any more even if it has been filtered.

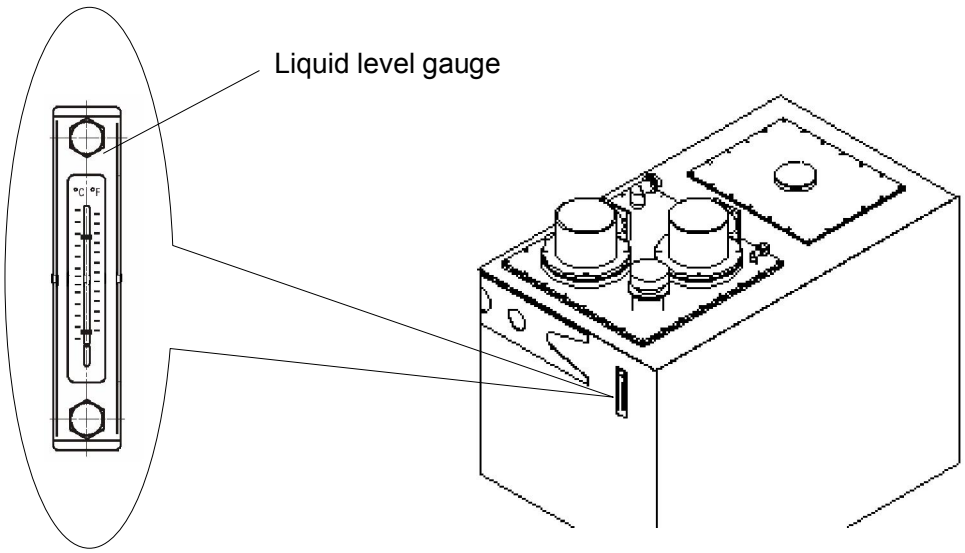

7.4.1.3 Checking the oil temperature

A liquid level gauge is installed either at the front or rear end surface of hydraulic tank.

Observe the temperature of hydraulic oil from the marks on the liquid level gauge.

The highest working temperature: 80°C.

7.4.1.4 Checking the oil level

Check the oil level in crane's driving condition (with all the oil cylinders retracted).

The oil temperature and level can be checked from the marks on the liquid level gauge.

Ensure that the oil level is between the minimum and maximum marks in the condition of all the oil cylinders retracted when filling oil.

The mark 0°C is the minimum mark.

If the oil level has dropped below the minimum mark, top up with hydraulic oil until the oil level is between the minimum and maximum marks.

Oil reserve of superstructure hydraulic tank: 920 L

Oil reserve of chassis hydraulic tank (for outriggers, suspension and steering system): 130L

7.4.1.5 Table – Oil properties and brand

Properties and brands of hydraulic oil required for different ambient temperatures (regions and seasons) are listed in the following table. Read it carefully before choosing hydraulic oil.

Item	Ambient temperature above 40°C	Ambient temperature between -20°C and 40°C	Ambient temperature above -30°C	Ambient temperature below -30°C
Reference standard				SH 0358-95
Type	ESSO Nuto H68	ESSO Nuto H32	Mobil DTE 13M	Aviation hydraulic oil
Viscosity grade	68	32	32	10
Min. Flash point (split) ℃	234	212	172	92
Kinematic viscosity at 40℃ mm²/s	61.2-74.8	28.8-35.2	28.8-35.2	⩾10 at 50℃
Max. temperature when kinematic viscosity reaches 1500 mm²/s ℃				-50
Min. viscosity index	107	104	144	
Max. pour point ℃	-18	-24	-40	

7.4.2 Gear oil

Use the gear oil recommended in this manual.

Slewing reducer of our product has been topped up with 90# industrial gear oil (Type: SY1172-80) before delivery.

Its properties are listed in the following table.

Kinematic viscosity (100℃) mm²/s	Flash point (split), ℃	Ingredients
13.5 - <24.0	⩾165	Organic acid fat, phosphoric acid fat, silicic acid fat, fluorin oil, silicon oil, polyphenylene oxide + addictive

7.4.2.1 Oil changing intervals

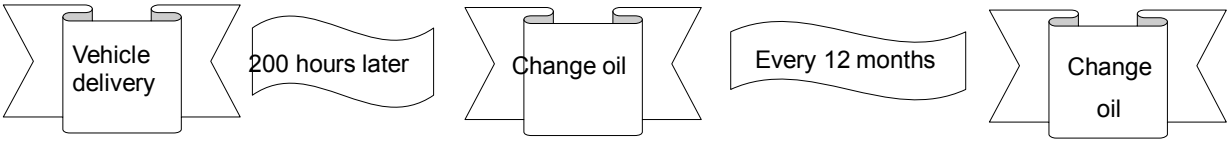

Caution:

a. Once the gear oil is found seriously polluted, change it immediately even if the oil change interval has not come.

b. Often check oil level and add oil in time if it is lower than the minimum mark;

c. Hydraulic oil of different brands cannot be mixed;

d. Use the recommended gear oil according to ambient temperature. The reducer mechanism will be damaged due to unqualified gear oil or gear oil with improper viscosity.

7.4.2.2 Oil change

1) Winch reducer

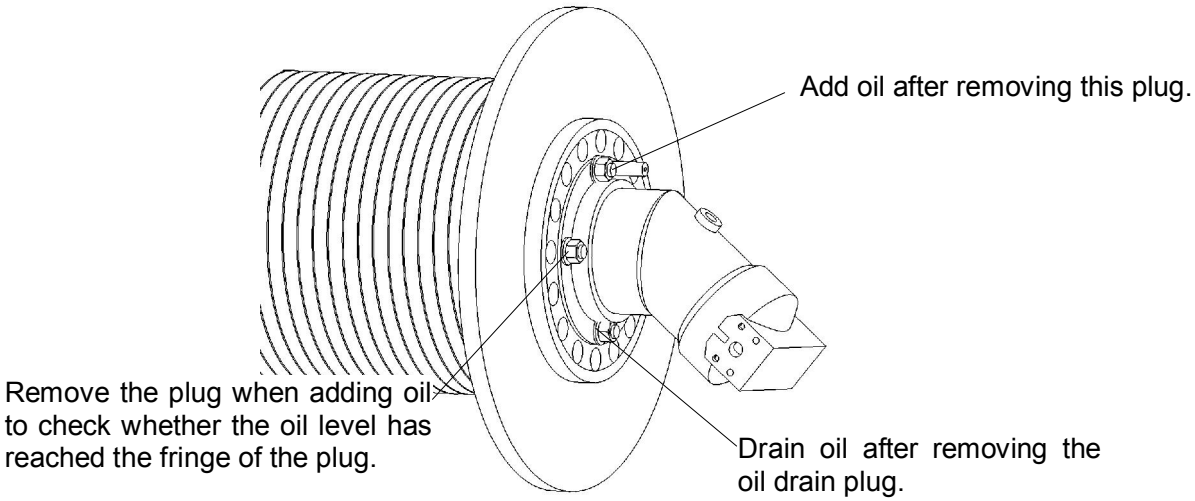

Note:
The gear oil quantity for one reducer is about 4 liters.

2) Slewing reducer
Add oil after removing the plug of oil filler aperture.

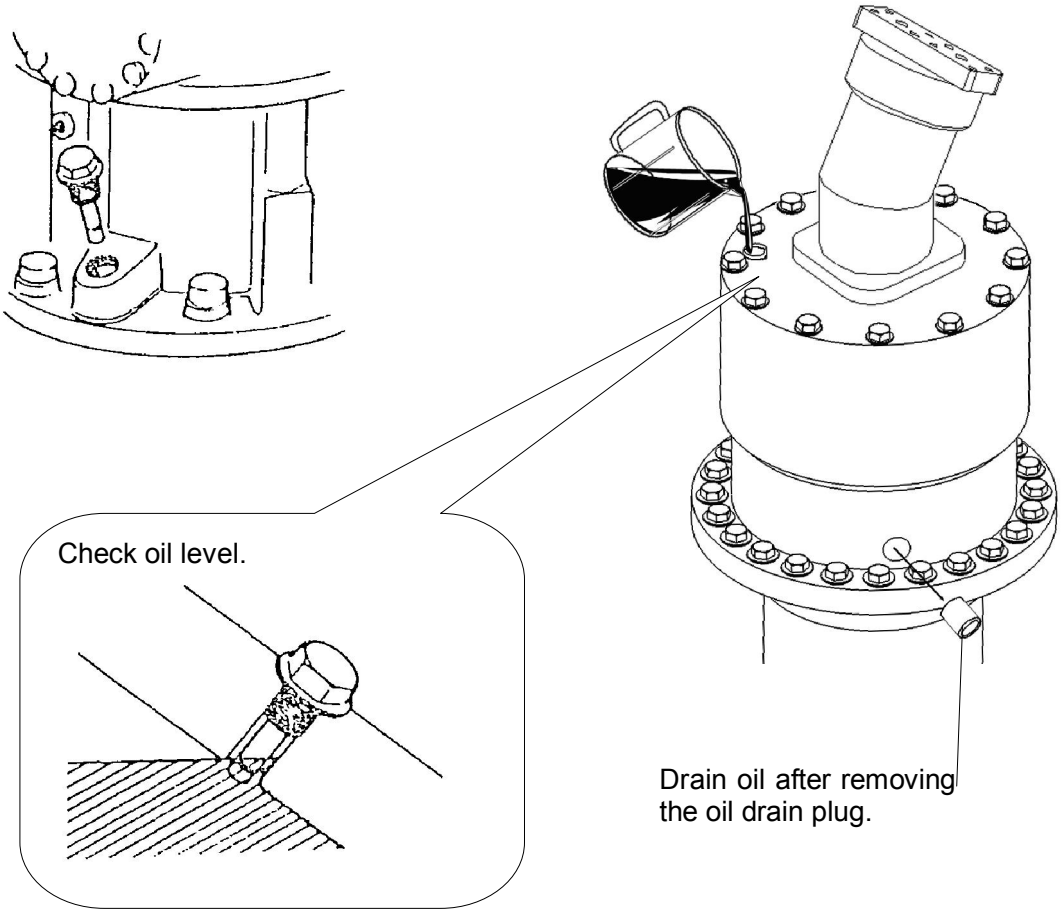

Note:
The gear oil quantity for one slewing reducer is about 2.25 liters.

3) Axles
The gear oil quantity for axle 2, axle 4 and axle 5 is 25L

4) Transfer case
The gear oil quantity for transfer case: 12.5 L

Recommended gear oil type for heavy-duty vehicle: GL-5 85W/90 (ambient temperature: -15° - 49°)

7.4.3 Lubricating grease

Lithium base grease (ZL-2)
Molybdenum disulfide grease (ZFG-4E)

Note:

Use the recommended lubricants.

Filling method: grease or fill with grease pump
Some parts can be lubricated via the central lubricating system (See Chapter 3.2.5.10).

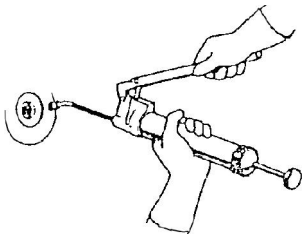

Parameter / Type	Appearance	Drop point (ºC)	Work wimble degree (1/10mm)	Moisture (%) ≤
ZL-2 lubricating grease	Smooth inunctum with the color from light yellow to brown	175	265 - 295	——
ZG-3 lubricating grease	Equal inunctum with the color from light yellow to dark brown	90	220 - 250	2.5
ZFG-4E lubricating grease	Equal inunctum with dust color	——	300 - 350	Trace

7.4.4 Engine oil

For details about engine oil, see *Operating Instructions for Engine*.

Caution:

To improve the cold start ability of the diesel engine at a low temperature, use the recommended engine oil;

The fuel tank must be topped up; otherwise solidification of air moisture inside the fuel tank will get frozen to rust the oil tank and affect the cold start ability of the engine.

7.4.4.1 Fuel

Ensure that the following prerequisites are met when choosing fuel:

- Only the light diesel oil listed in appendix C of GB17691-2005 can be used;
- The light diesel must be filtered for 24 hours and its sulfur content must be lower than 0.5%;
- Choose the proper fuel according to its lowest ambient temperature.

Use the proper diesel oil according to the ambient temperature:
Temperature ≥ 5℃: 0# (GB252-94)
-5℃ ≤ Temperature ≤0℃: -10# (GB252)
-14℃ ≤ Temperature ≤ -5℃: -20# (GB252)
-29℃ ≤ Temperature ≤ -14℃: -35# (GB252)
-44℃ ≤ Temperature ≤ -29℃: -50# (GB252)

Diesel oil quantity (superstructure): 220 L
Diesel oil quantity (chassis): 400 L

7.4.4.2 Lubricant

Lubricant grade: CF-4 or CH-4

Viscosity grade: according to ambient temperature (See illustration 1)

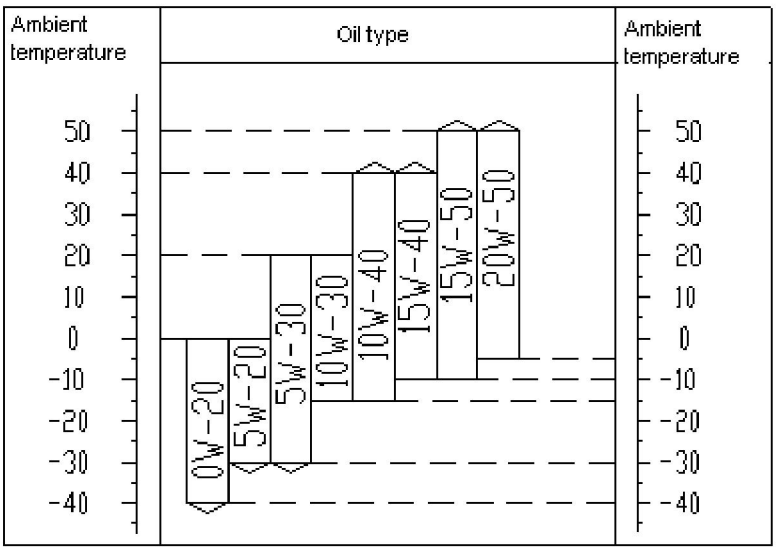

Illustration 1 Lubrication chart

We recommend the 15W/40 engine oil (grade: CF-4) at an ambient temperature above -15℃ and 5W/20 engine oil at an ambient temperature below -15℃ to lower the fuel consumption and avoid oil changing in a new season.

The oil level must be between the minimum and maximum marks on the oil dipstick in the condition that the crane is horizontal and the engine has been turned off.

Caution:

a. Do not check the oil level during engine running;
b. Do not mix the oil of different brands;
c. Do not use the lubricating oil of CE, CC, CB and CA grades.

7.4.5 Cooling medium

The cooling water added in the diesel engine must be soft water mixed with 5-in-1 environment-friendly antifreeze or anti-rusting and long-acting antifreeze fluid.

This crane has been added with 50% soft water mixed with 50% 5-in-1 environment-friendly antifreeze fluid (specification -25℃ and suitable for ambient temperature above -5℃).

As for detailed instructions, please refer to the *Antifreeze instruction manual.*

If you want to change the 5-in-1 environment-friendly antifreeze fluid into long-acting antifreeze fluid, observe the requirements in the following table (See illustration 1):

The long-acting antifreeze fluid is of the ability of anti-rust and anti-rusting and anti-freezing ability. As for the dosage of long-acting antifreeze fluid, see its instruction manual.

As the long-acting antifreeze fluid is made in China, its dosage can be checked in the following table.

Type / Dosage	JFL-318	JFL-336	JFL-345
Glycol %	33	50	56
Specific gravity at 15.6℃	1.05	1.074	1.082
Boiling point ℃	104.5±1	108.5±1	110.0±1
Freezing point ℃	-18±1	-36±1	-45±1
Lowest ambient temperature ℃	-10	-26	-35

Add anti-corrosion agent (NL anti-rusting emulsion and LQS comprehensive preventive agent) to the cooling water at an ambient temperature above 5℃.

As for its dosage in soft water, see its instruction manual.

The cooling water quantity: 60 L

Its dosage is as follows:

Cooling water dosage and grade

Dosage and grade	min.	max.	
PH	6.5	8.5	Only the water met these requirements can be mixed with 5-in-1 environment-friendly antifreeze fluid or long-acting antifreeze fluid and anti-corrosion agent.
Ion in chloride mg/dm^3	-	100	
Carbonate mg/dm^3	-	100	
Anion mg/dm^3	-	150	
Hardness (using long-acting antifreeze fluid) mg/dm^3	3	12	
Hardness of carbonate mg/dm^3	3	-	
Hardness (using anti-corrosion agent) (Pay attention to the instructions of manufacturer mg/dm^3	0	10	

Caution:

a. Check the viscosity of antifreeze fluid at an ambient temperature below 0℃ every 1000h and at least every 3 months; to avoid corrosion, replace the antifreeze fluid every 2 years;

b. For the crane running at an ambient temperature above 0℃ all over the year, you can use the water after anti-rusting and anti-scaling treatment as the cooling medium.
It is forbidden to substitute coolant with ordinary water!

c. The performance of 5-in-1 environment-friendly antifreeze fluid is superior to the long-acting one. We recommend “basf" special anti-rusting and antifreeze fluid for Benz engine. Mix it with water in a proportion of 1 to 1;

d. If you use long-acting antifreeze fluid, the one suitable for all-season and all-purpose is recommended.

7.4.6 Lubricating points

Working oil and lubricating grease used in this vehicle can not only ensure normal working of each mechanism, but also prolong their service life and bring their function into full play. Therefore, lubricate regularly in accordance with specified grease and lubricating points.

7.4.6.1 Lubrication – superstructure

● Lubricating table

Pos.	Description	Lubricating intervals	Lubricating method	Lubricating grease type
1	All sliding surfaces on the telescopic boom	Every 10 days	Grease or inject with grease pump	ZFG-4E molybdenum disulfide grease
2	Upper pulley block (shaft)	Every 10 days	Inject with grease pump	ZL-2 lithium base grease
3	Lower pulley block (shaft)			
4	Upper articulated-point shaft and knuckle bearing of derricking cylinder	Every month	Inject with grease pump or use central lubricating system	ZL-2 lithium base grease
5	Pulley block (shaft) on main / auxiliary hook	Every 10 days	Inject with grease pump	ZL-2 lithium base grease
6	Lower articulated-point shaft of derricking cylinder	Every month	Inject with grease pump or use central lubricating system	ZL-2 lithium base grease
7	Slewing reducer	Every 6 months	Pour directly	90# industrial gear oil
8	Engine control foot pedal shaft seat	Every month	Inject with grease pump	ZL-2 lithium base grease
9	Slewing ring and gear	Every 10 days	Grease, inject with grease pump or use central lubricating system	ZL-2 lithium base grease
10	Operator’s cab, extendable or inclinable	Every month	Inject with grease pump	ZL-2 lithium base grease
11	Hydraulic tank for superstructure	Every 6 months	Pour directly	Hydraulic oil (See chapter 7.4.1)
12	Sliding surfaces of sliding beam	Every 10 days	Grease	ZFG-4E molybdenum disulfide grease
13	Pulley in outrigger	Every 10 days	Grease or inject with grease pump	ZL-2 lithium base grease
14	Counterweight assembly / dismantling mechanism	Every 6 months	Inject with grease pump	ZL-2 lithium base grease
15	Main / auxiliary winch reducer	Every 6 months	Pour directly	90# industrial gear oil
16	Wire rope	Every 10 days	Grease	ZL-2 lithium base grease
17	Telescopic boom main shaft	Daily	Grease, inject with grease pump	ZL-2 lithium base grease
18	Pulley block (shaft) on jib	Every 10 days	Inject with grease pump	ZL-2 lithium base grease
19	Propeller shaft for oil pump	Daily	Inject with grease pump	ZL-2 lithium base grease

● **Lubricating graph - superstructure**

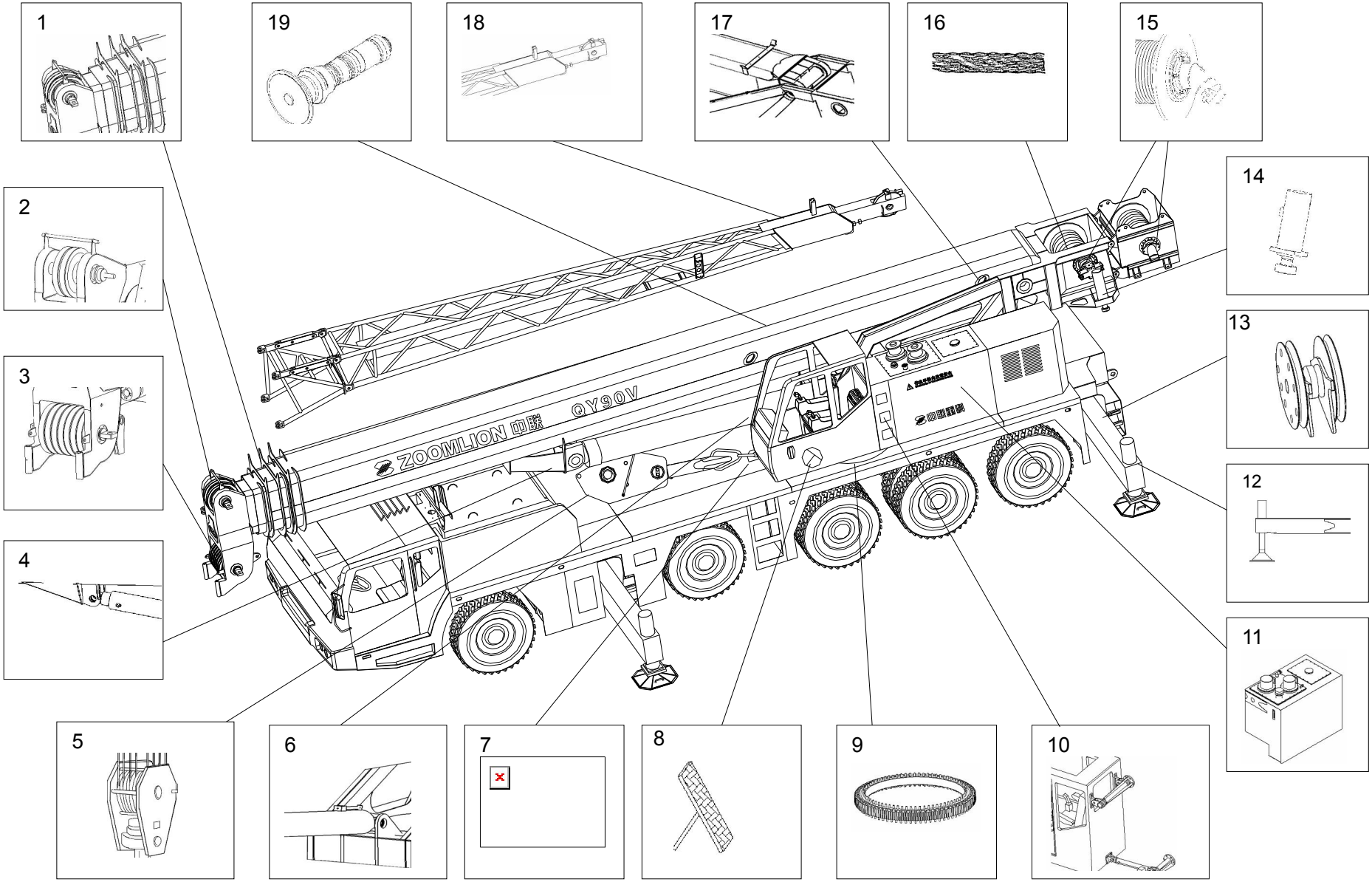

Caution:

A. Before adding oil, clean the oil cup and the surfaces to be greased;

b. Lubricate the sliding surfaces not listed in the above table regularly;

c. The lubricating grease of different brands cannot be mixed;

d. When injecting grease into the bush, shaft and bearing, inject grease until the original grease flows out;

e. If the piston rod of boom derricking cylinder is partly exposed when the boom is secured on the boom bracket, grease the exposed section every month.

7.4.6.2 Lubrication –chassis

● **Lubricating table**

Pos.	Description	Number of lubricating point	Lubricating intervals	Lubricating method	Lubricating grease type
1	Water pump shaft	1	1500km	Inject with grease pump	ZL-2 lithium base grease
2	Suspension oil cylinder pin	8	1000km	Inject with grease pump	ZL-2 lithium base grease
3	Suspension thrust rod assy.	16	5000km	Inject with grease pump	ZL-2 lithium base grease
4	Engine oil container *	1	5000km	Add oil	GB11/22-2006 GH-4 1500/40
			20000km	Change oil	
5	Transmission *	1	Half a year	Add oil	GB13895-1992 GL-5 85W/903
			300000 km, not exceed 3 years	Change oil	
6	Sliding fork for propeller shaft	6	5000km	Inject with grease pump	ZL-2lithium base grease
7	Intermediate bearing for propeller shaft	1	1500 km	Inject with grease pump	ZL-2 lithium base grease
8	Transfer case *	1	10000km	Change oil	GL-5 85W/90 gear oil for heavy-duty vehicle
9	Universal-joint bearing for propeller shaft	26	1500km	Inject with grease pump	ZL-2 lithium base grease
10	Hub reducer for driven axle	8	1500km	Add oil	GL-5 85W/90 gear oil for heavy-duty vehicle
			10000km	Change oil	
11	Central reducer for driven axle	4	1500km	Add oil	GL-5 85W/90 gear oil for heavy-duty vehicle
			10000km	Change oil	
12	King pin for steered axle	10	5000km	Inject with grease pump	ZL-2 lithium base grease
13	Connecting shaft for steering rocker arm	5	5000km	Inject with grease pump	ZL-2 lithium base grease

Pos.	Description	Number of lubricating point	Lubricating intervals	Lubricating method	Lubricating grease type
14	Battery electrode post	4	Every season	Brush with oil	Industrial Vaseline LF40
15	Universal joint for oil pump propeller shaft	2	5000km	Inject with grease pump	ZL-2 lithium base grease
16	Steering drag link union	20	5000km	Inject with grease pump	ZL-2 lithium base grease
17	Steering hydraulic tank	1	10000km	Change oil	L-HV32 hydraulic oil
18	Universal joint for steering gear shaft	1	5000km	Drip in	HJ-20 mechanical oil
19	Angular drive device	1	5000km	Inject with grease pump	ZL-2 lithium base grease
20	Rear leaf spring	3	10000km	Brush with oil	ZG-S graphite calcium base grease
21	Rear leaf spring pin	3	10000km	Change oil	ZL-2 lithium base grease
			2000km	Inject with grease pump	
22	Balance beam and thrust rod of rear suspension	24	5000km	Inject with grease pump	ZL-2 lithium base grease
23	Ball pin of tie rod	6	5000km	Inject with grease pump	ZL-2 lithium base grease

Note:

For details of the components marked with *, please refer to the operating instructions provided by manufacturer.

● **Lubricating graph - chassis**

Parts 20~23 are not shown in the following fig.

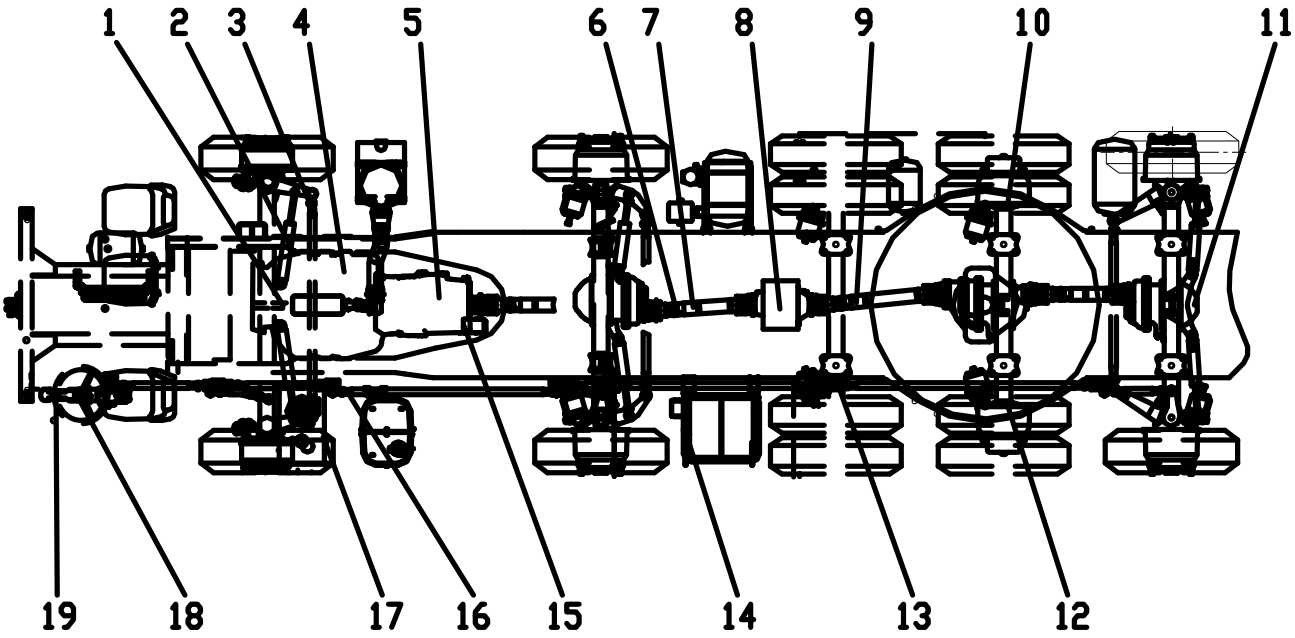

Caution:

a. Determine the engine actual working time according to the tachometer and carry out maintenances in accordance with “Diesel engine maintenance specifications” in *Operating Instructions for Engine*;

b. After adding or replacing lubricating grease, wipe off the grease around the threaded plug and check for leaks;

c. For the first replacement of the gear oil for the rear axles after the break-in period of a new crane:

- Add diluted engine oil into rear axles after draining off the original oil.
- Support the crane rear wheels, start the engine and engage the gear.
- After running for about 5 minutes, wash the rear axles, drain off the washing engine oil and then add new gear oil.

d. The oil change intervals for transmission and engine should be prolonged in half under conditions of long parking time and short driving time.

7.5 Adjusting, cleaning and replacing parts

7.5.1 Replacing the wire rope

Regular checking of the rope is required, especially before using and after installation. Moreover, check the wire rope strictly if special tightening force is acting on the rope, or invisible damages and signs of damages occur on the rope.

Suspended wire ropes, rope end connections and drive elements of some wire ropes must be checked at regular intervals. Check to ensure that the drum and the pulley can rotate smoothly on their mounting positions, and no obvious indentation of wire rope occurs in the path of motion for the wire rope.

Caution:

After the rope is used for a period, its strength will be reduced to such an extent that continued use thereof may be extremely dangerous.

7.5.1.1 Take-down criteria

1) There is 10% broken rope in one strand (excluding the break caused by damage to the rope core);

2) The diameter is reduced by more than 7% of its nominal diameter;

3) The wire rope is reverse bent or knot;

4) The wire rope is seriously deformed; rope core is revealed, birdcage deformed and is in corrosion.

Caution:

The wire ropes must be taken down before they reach the above 4 stages.

5) Tension caused by rope coming out from the pulley;

6) Damage caused by heavy objects;

7) Damage caused by electric welding or gas welding;

8) Damage caused by short circuit;

9) Damage caused by the effect of heat;

Caution:

The wire ropes can be taken down according to the wearing conditions before they reach the above 5 stages.

Illustration - Damaged wire ropes

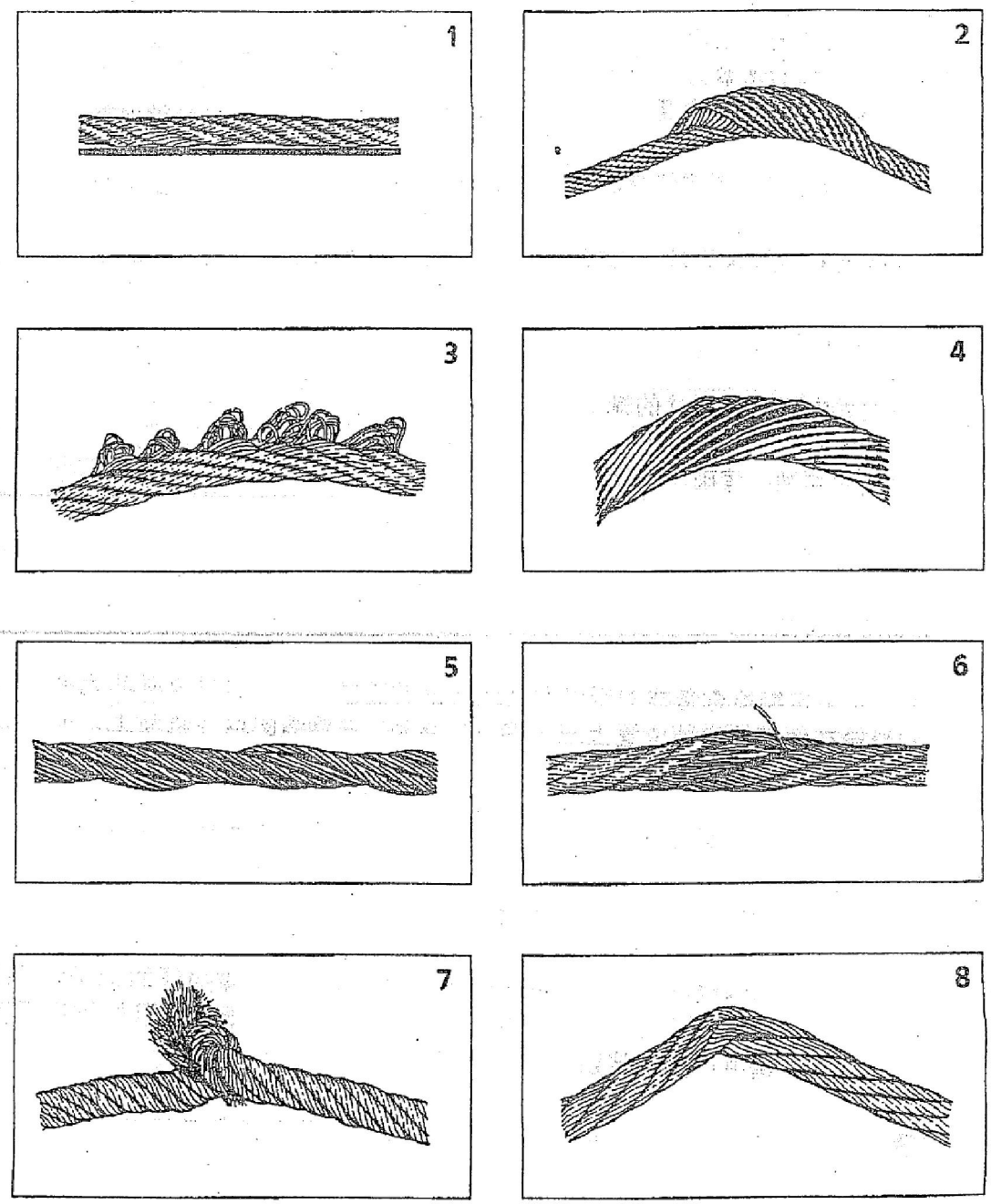

Danger:

The ropes must be taken down immediately if any of the following stages occur.

- One strand is broken.
- Rope is broken in a small range.
- Corkscrew-like deformation: deformation (See picture 1) at the worst point reaches 1/3 of the nominal rope diameter.
- Birdcage formation (See picture 2).
- Wire loop formation (See picture 3).
- Loosening of single wires or wire braids (See picture 4).
- Knots (See picture 5).
- Flattening (See picture 6).
- Reverse bends or knots (See picture 7).
- Kinks (See picture 8).

If exceptional damages occurred on the rope, the operator must find out the reason and repair it before replacing the rope.

Damages and friction trace on the crane can provide important clues.

Warning:

In case the safety of subsequent use of wire rope can not be guaranteed, please stop using the wire rope and consult experts

7.5.1.2 Maintenance

Regular maintenance and service of the rope is required in order to ensure safe operation of the crane and prolong the service life of the rope.

Within certain intervals, the rope should be lubricated with grease or oil in accordance with the operating conditions of the rope, particularly in areas in which the rope is subjected to bending when it runs over the drum and pulleys.

Under the same testing conditions, curvature for well-lubricated rope is 4 times larger than the rope without lubrication. The lubricant that is used must be compatible with the original one.

Caution:

The lubricant that is used on the rope must be standard commercial lubricant recommended by the manufacturer. Please refer to lubricating tables.

Dirty ropes should be regularly cleaned with brush.

In the event that the lower rope layers on the drum are used infrequently or not at all, they would be re-loosened and re-tensioned by pre-tightening force. A rope is most cost-effective when the entire length is used. An appropriate rope length should therefore be used when operating the crane over longer periods.

If one certain rope section is more frequently used than the other sections, turnover the rope at regular intervals. Connect the original rope free end to the drum, so that the working frequency can be balanced. In this way, service life of the rope can be greatly prolonged. The modification of quick-connected rope end should be performed by the wire rope manufacturer.

7.5.1.3 Twisting caused by stretching in non-twisting ropes

The twisting of new wire rope, which has been placed or used for a period, caused by stretching in non-twisting ropes should be remedied.

When the hook pulley block is operated with multi-reevings, and when the load is lowered and / or the rope outer strand seems loose and even arch type appears on the rope, warn in time and adjust the twisted parts.

Generally speaking, a twisting-proof device is fitted on the fixing point of hoist rope. As for the ropes without the twisting-proof device, please refer to instructions in ”Remedying the twisting”.

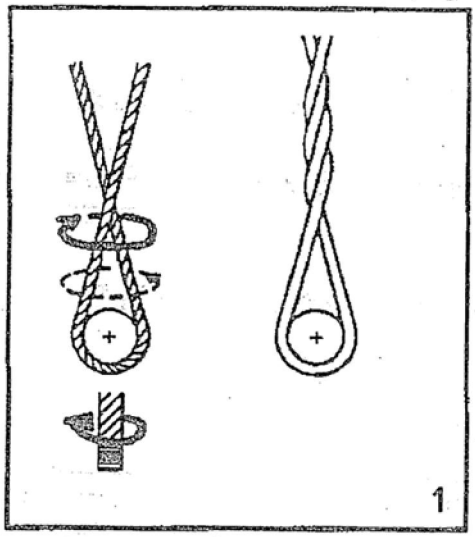
1

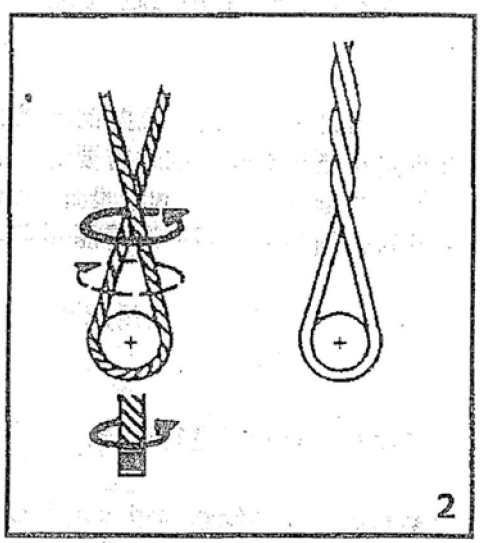
2

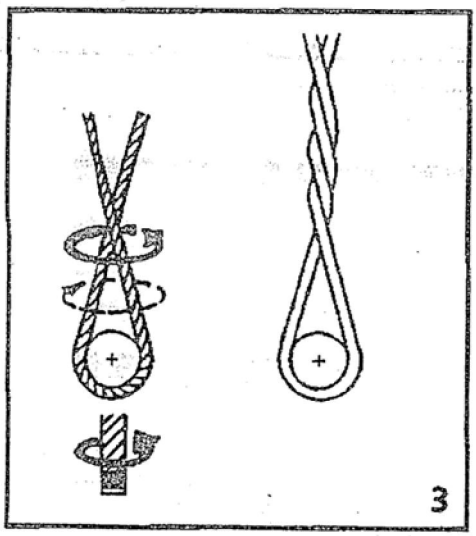
3

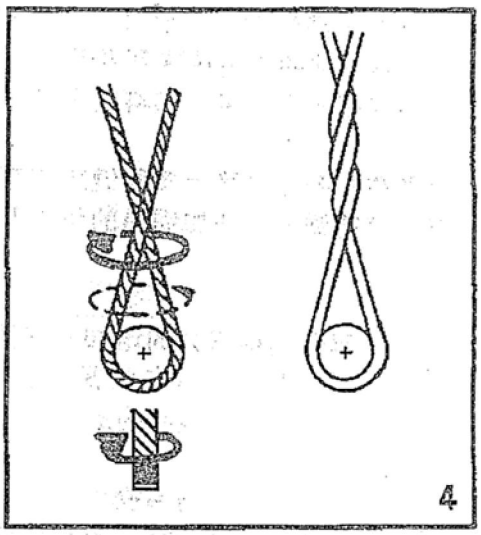
4

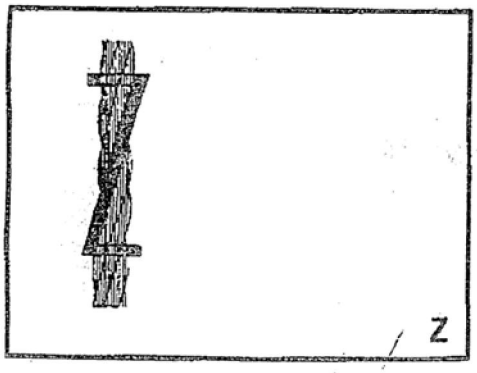
Z

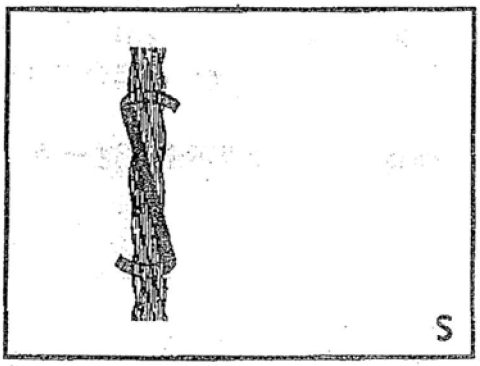
S

7.5.1.4 Remedying the twisting

1) Lowering the hook block

Lower the hook block as low as possible to adjust the rope between the pulley on boom head and the hook pulley in the maximum length.

2) Judging the rotating direction

Judge that in which direction the hook pulley block is twisted.

The rotating direction is indicated by an actual-line arrowhead in the picture.

As the judgment is hard to make, especially when the hoist rope is extremely long, rotate the rope in the dotted-line arrowhead direction and check. As a result, the twisted ropes can certainly be loosened.

3) Loosening the rope at a fixing point

After making sure the rotating direction, loosen the rope at a fixing point on the hook pulley.

Caution:

As for the adjusting the twisted force, the rope reeved on the hook pulley block in odd number is favorable. Under this circumstance, the fixing end of rope is on the hook, so the rope can be easily loosened.

4) Rotate the rope end from the 180° position to 360° position carefully, and adjust the rotation of hook pulley block.

As for the adjustment of rotation, the rotating direction is indicated (by actual-line arrowhead) on the rope end.

Caution:

It is important for the operator to hold the rope in his front and select correct reference point.

The rope (Z) with right-hand lay direction as indicated in Picture 1 and the rope (S) with left-hand lay direction as indicated in Picture 4 must be adjusted by being rotated in. The rope (Z) with right-hand lay direction as indicated in Picture 2 and the rope (S) with left-hand lay direction as indicated in Picture 3 must be adjusted by being rotated out.

Rules for adjusting twisted rope: the rope end must be rotated against the rope lay direction, so that the twisted ropes can be loosened.

Warning:

The rope to be rotated must be as long as possible, so that the rope can be rotated in the whole length through hoisting motions without load. Under no circumstance,

can the rope be rotated by external force over a short section, because this would destroy the cable structure permanently.

5) Connecting the rope to the fixing point
After rotating the rope, connect the rope end to the fixing point and secure it.

6) Raise the hook without load carefully. Repeat this procedure if necessary.

It is relatively safe for the rope structure which is not stretched. This kind of rope only stretches a little (the twisting will not exceed the head pulley block actually); therefore, carry out hoisting motions without load for several times.

After the twisting of the rope end being adjusted, re-connect the rope end to the fixing point, and repeat hoisting motions without load once or for several times. In this way, the adjusting function for twisting can be spread all over the whole length of the rope across the head pulley block.

Caution:

When the stretching phenomenon of wire rope is serious (multi-twisting on lower pulley block and / or the outer strand of a long rope section loosens on several points), repeat this procedure if necessary in accordance with the length of hoist rope.

7.5.1.5 Methods for replacing and spooling the wire rope

Danger:

The rope must be replaced with a rope that is of the same type, same diameter and same reliability as the original.

If the wire rope is of another type, permission from the crane manufacturer should be obtained at first.

Wire ropes can be easily damaged by external force, so special attentions should be paid during transportation or when there is no load on them.

Wire ropes should be kept in clean, low temperature and dry places, and should not be laid on the earthen ground.

Wire ropes can only work normally without twisting or other external damages.

Correct spooling method:

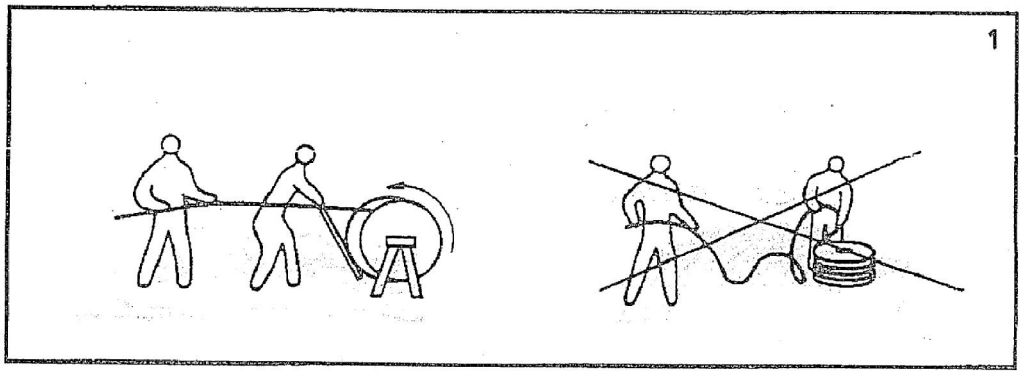

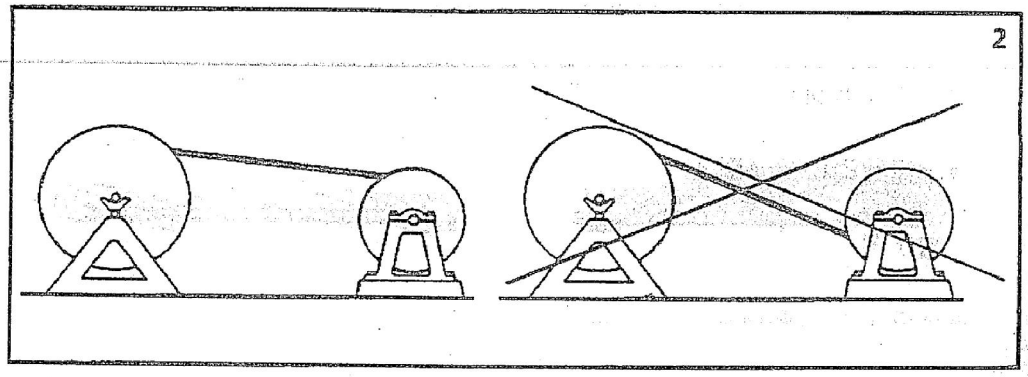

Wire ropes can be spooled directly onto a drum or ring-type objects (See picture 1).

Do not spool the rope laterally. Because the ropes will be twisted and be damaged by pulling force.

The best method is to spool the rope from a higher drum to the lower one. (See picture 2).

The rope spooling direction should be the same as its bending direction to prevent additional stress, so that ropes can be spooled onto the drum in good state.

Warning:

Do not drag the rope on the ground to prevent the rope from being dirtied.

The rope ends of non-twisting ropes must be protected from twisting under strain using appropriate rotating rope end connections.

If the ropes are spooled onto a multi-layer drum, the downmost layer should be tensioned with a pre-tightening force of 1% to 2% of the minimum breaking force of the rope. This pre-tightening force can be obtained from the drum brake.

For the pulley block, the hoist rope should be reeved in the same direction as in the drum. If the ropes are limited by their length, the ropes must be laid on the ground when the ropes are being reeved onto the hook to ensure that the ropes are not twisted.

After replacing the ropes, test them with part of the load at first, and then spool up and reel off winches for several times to shrink the rope, in order to changeover between the hook with load and the hook without load. In this way, the rope can adapt to the bending direction and radius of the pulley and the drum.

● **Replacing the hoist rope**

1）Changing crane operating conditions

(1) Support the crane on firm and load-bearing ground;

(2) Fully telescope in the boom.

2）How to replace the hoist rope

(1) Lower the main hook and set it on the ground;

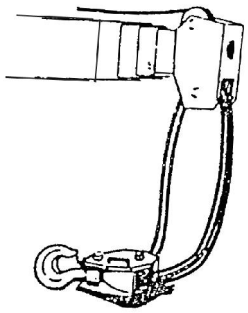

Caution:

Operate carefully to avoid the rope from disordering on the drum.

(2) Take down the rope lock and take out the press nipple;

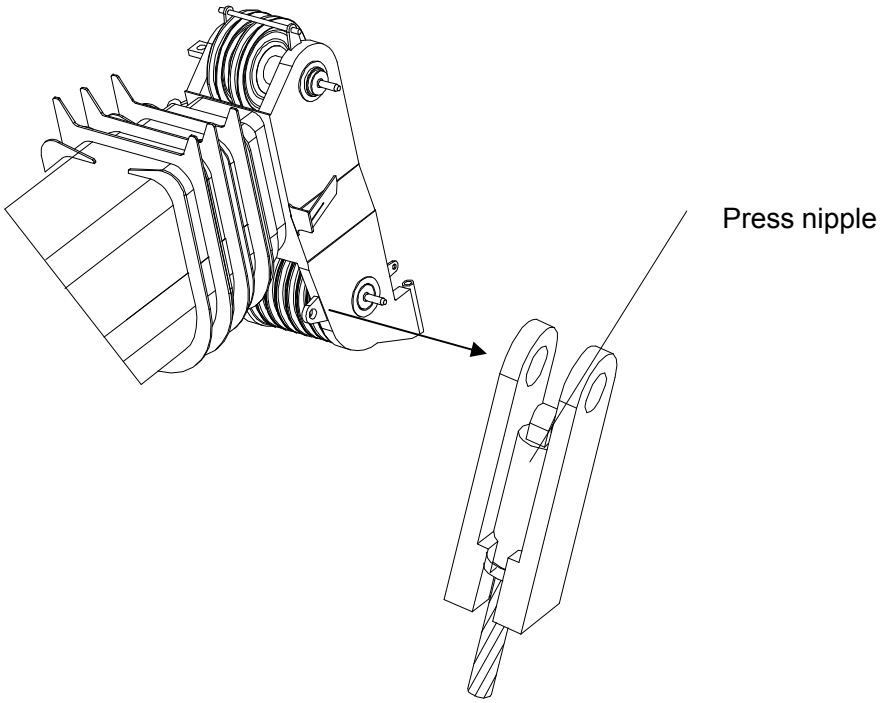

Keep the parts orderly and do not lose them.

(3) Lower the hook, spool the rope off the drum and pull out the rope manually;

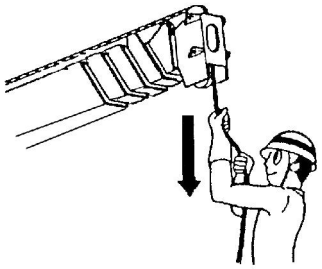

Caution:

The lowering limit switch will be activated to cut off the spooling down motion when only 3 hoist rope windings are left on the main winch. Press the bypass key switch to release the limitation until the main winch is reeled off completely.

(4) Take down the rope from the drum;

(5) Reeve the new rope (in reverse sequence of above steps);

(6) Derrick the boom up and telescope it out. Lower the hook until only 3 hoist rope windings are left on the winch;

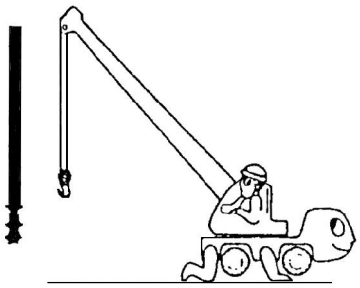

Caution:

Do not lower the hook excessively to avoid rope damage and accident.

(7) Spool the wire rope onto the drum with a load whose weight is 30% of the max. permitted lifting capacity per strand;
Weight of the load: W=0.3NP

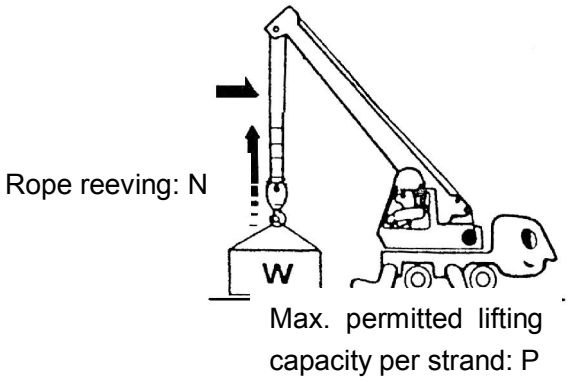

Caution:

Do not exceed the rated lifting capacity.

(8) Unload the load from the main hook.

7.5.2 Replacing the hook

The hook must be taken down by being assessed in accordance with the following circumstances: (If the hook is defective, welding up is not permitted.)

1) There's crack and crevasse on the surface of the hook;

2) The hook's split degree exceeds 10% of its original dimension;

3) The abrasion of the dangerous sectional plane reaches 10% of the original dimension;

4) The wear extent of the sectional plane in the point where wire rope is suspended exceeds 10% of the original height;

5) The twisting and deformation of hook exceed 10°;

6) There is plastic deformation in dangerous sectional planes such as the tail of hook, the screw threaded part and hook web.

7.5.3 Checking and replacing return-line filter

The return-line filter is installed on the hydraulic tank to filter the impurities such as metal particles from worn hydraulic elements or worn rubber sealing material, thus to maintain the extreme cleanliness of the oil flowed into tank.

WY-type filter has a perpetual alnico which can filter the iron grain bigger than 1um in the oil and also filter partial magnetism and none-magnetism mixture. Thus it can greatly improve the working reliability and prolong the service life of the hydraulic system.

The texture of the filter is non-woven chemical fabric with the advantage of the high filtering precision, strong oil-through capacity, low original pressure loss, great pollution tolerance capacity and so on. And its filter precision can be calibrated by the absolute filter precision. Its filter ratio and efficiency meet the requirements of ISO.

Unscrew and remove the filter cover to replace the return-line filter.

The filtered impurities will not enter into the hydraulic tank if the filtered is replaced because the hydraulic oil flows into the hydraulic tank via the inner layer of the filter.

1) Replacing intervals:

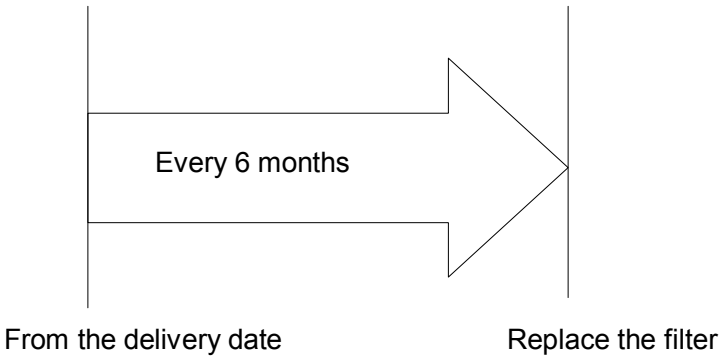

Caution:

Shut off the hydraulic pump when replacing the filter.

2) Replacing procedures:

(1) Remove the cover by wrench;

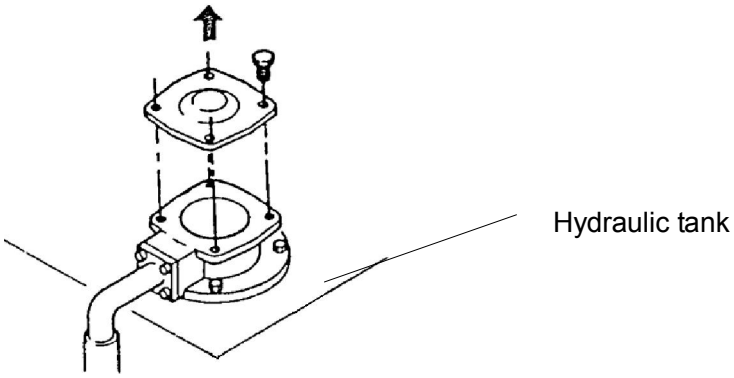

(2) Take out the spring and the perpetual alnico units;

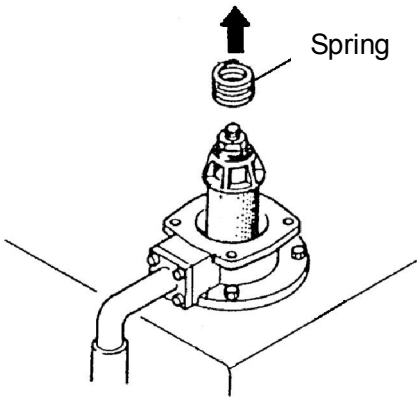

(3) Take out and replace the filter;

(4) Mount the spring and the perpetual alnico units;

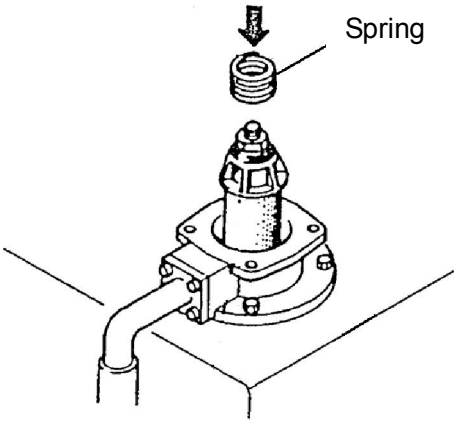

(5) Put on the cover and screw it tight with wench.

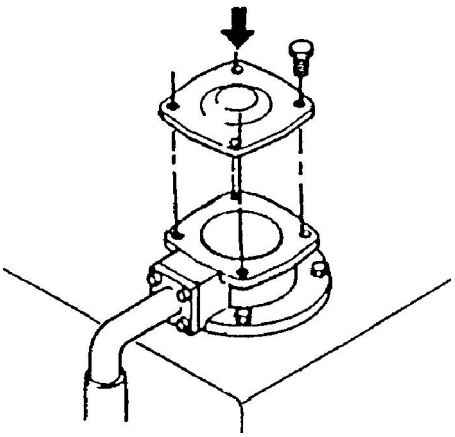

7.5.4 Replacing the hydraulic oil filter for closed slewing pump

1) After the first 100 hours of lifting operation, replace the hydraulic oil filter (for the first time) (screw rightward to remove it);

   Replace it every 500 hours.

2) Type of hydraulic oil filter: 0009830623V (1 replacement part is provided with the crane).

3) Position of hydraulic oil filter:

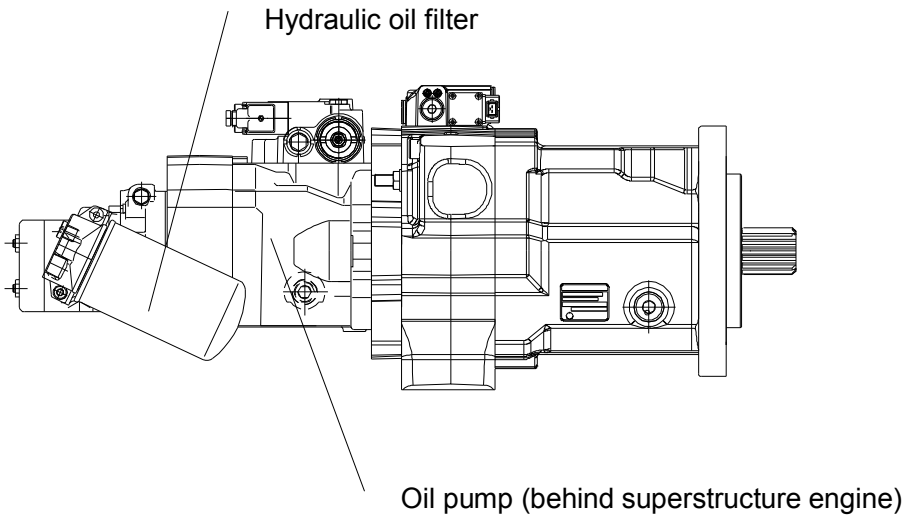

7.5.5 Cleaning and replacing the fuel filter

Clean the fuel filter every 250 hours (engine working time); and replace the filter every 1000 hours.

Steps for cleaning or replacing diesel oil filter are as follows:

1) Place a container below the oil drain plug of fuel filter;

2) Unscrew the aeration plug and oil drain plug to drain diesel oil and impurities;

3) Screw off the long central threaded rod and remove the oil filtering bottle, filter, spring seat and spring;

4) Clean the parts except filter with diesel oil.

Caution:

Do not wash the filter!

5) Check whether the filter is blocked or polluted. If it has been blocked or polluted seriously or used for 1000 hours, change it with a qualified new one. Replace the O-ring and washer if the filter is replaced;

6) Set a new washer into the long central threaded rod which is then put into the oil filtering bottle. Install the spring, spring seat, filter and washer or O-ring into the bottle in sequence. Screw the long central threaded rod into the filter cover until it is tightened;

7) Deaerate the filter with manual oil pump;

8) Check the filter for leaks.

7.5.6 Cleaning and replacing the air filter

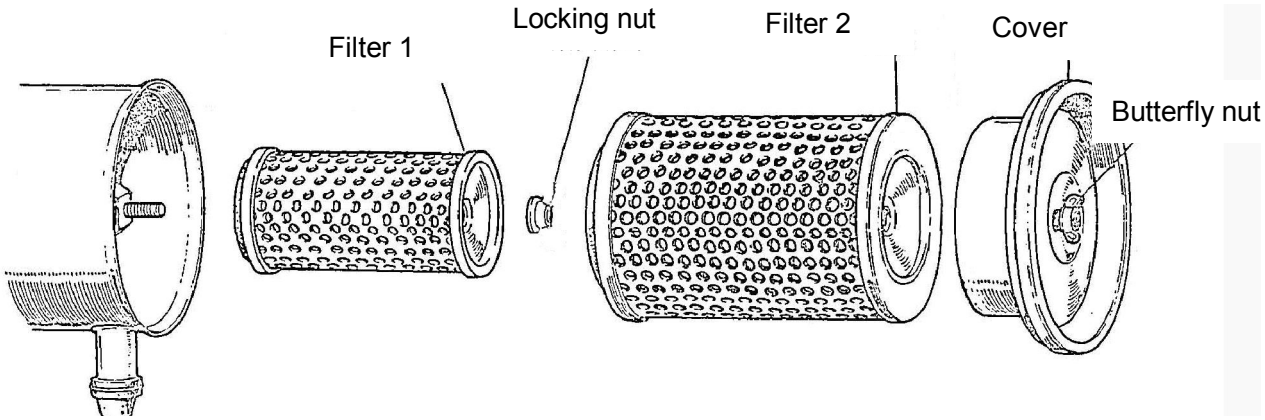

The air filter is equipped with a maintenance indicator. If the red bar indicator is visible, the filters must be cleaned or replaced.

After cleaning or replacing the air filters, press the button on the top of indicator.

- **Dismantle and assemble air filter in the following steps:**
  1) Screw off butterfly nuts and pull out the cover;
  2) Pull out filters;
  3) Clean air filtering bottle and cover;
  4) Screw the cover into the air filtering bottle with butterfly nuts.

Caution:

a. Ensure the filters and cover are properly installed to prevent dust from entering and the air filtering effect being affected;

b. Both filters 1 and 2 must be replaced and the filter 1 cannot be washed.

- **Clean the air filter:**
  1) Dry dust
     Supply compressed air along the filter flange to blow off the dust.

Caution

Do not knock and bump against the filters, and the speed of compressed air supplied should not be higher than 7kg/cm3

2) If the filter is polluted with oil fume, coal soot and oily filth, wash the filter with washing fluid in the following steps:

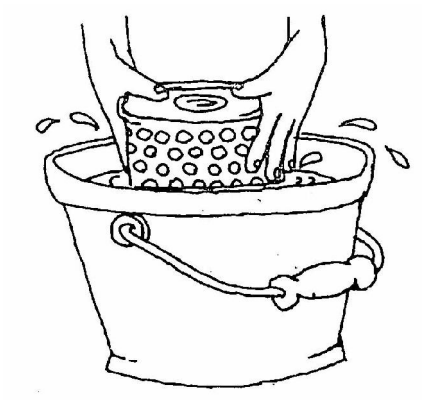

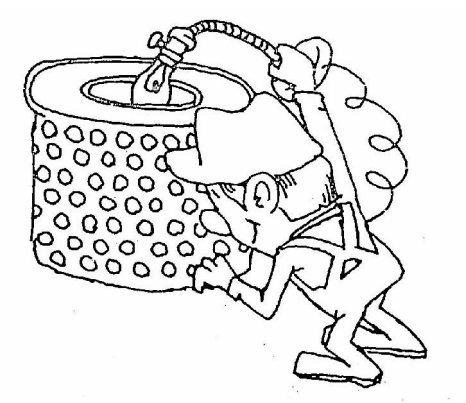

a. Dissolve the washing fluid into 40℃ water.

b. Place the filters in washing fluid for 30 minutes, and wash it with washing fluid for about 4-5 mins;

c. Take out the filter and rinse dirt and washing fluid with tap water. The water pressure should not be too high;

d. Dry the filter in the air. It can be dried with fan if needed. But do not dry it with flame or compressed air;

e. After air-drying the filter, check the filter paper for good condition with bulb. If the paper is in poor condition or the washer is damaged, replace it with a new one.

Caution:

a. The filter must be air-dried. Do not use wet filter;

b. Washing and drying will cost you several hours; therefore, you'd better prepare another one for option;

Note:

Replace it with a new one after washing for 3 times.

c. The filter 2 cannot be washed;

7.5.7 Replacing the pressure filter

This crane is equipped with 2 hydraulic pressure filters installed on the slewing table. Replace the filter cartridge after the pressure filter has worked for 250 hours.

Installation methods are as follows:

- Screw off the cover of oil filter counterclockwise
- Take out the filter cartridge
- Replace with a new one

Filter cartridge type: HX-63X20

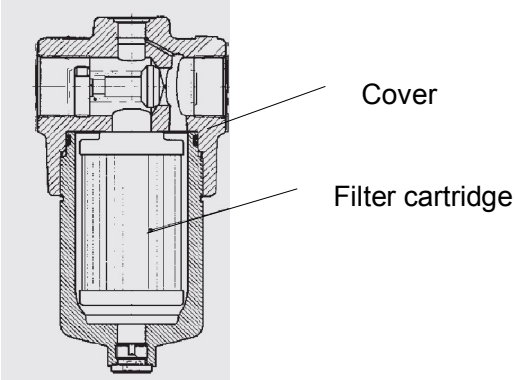

7.5.8 Adjusting the wire rope of sliding beam

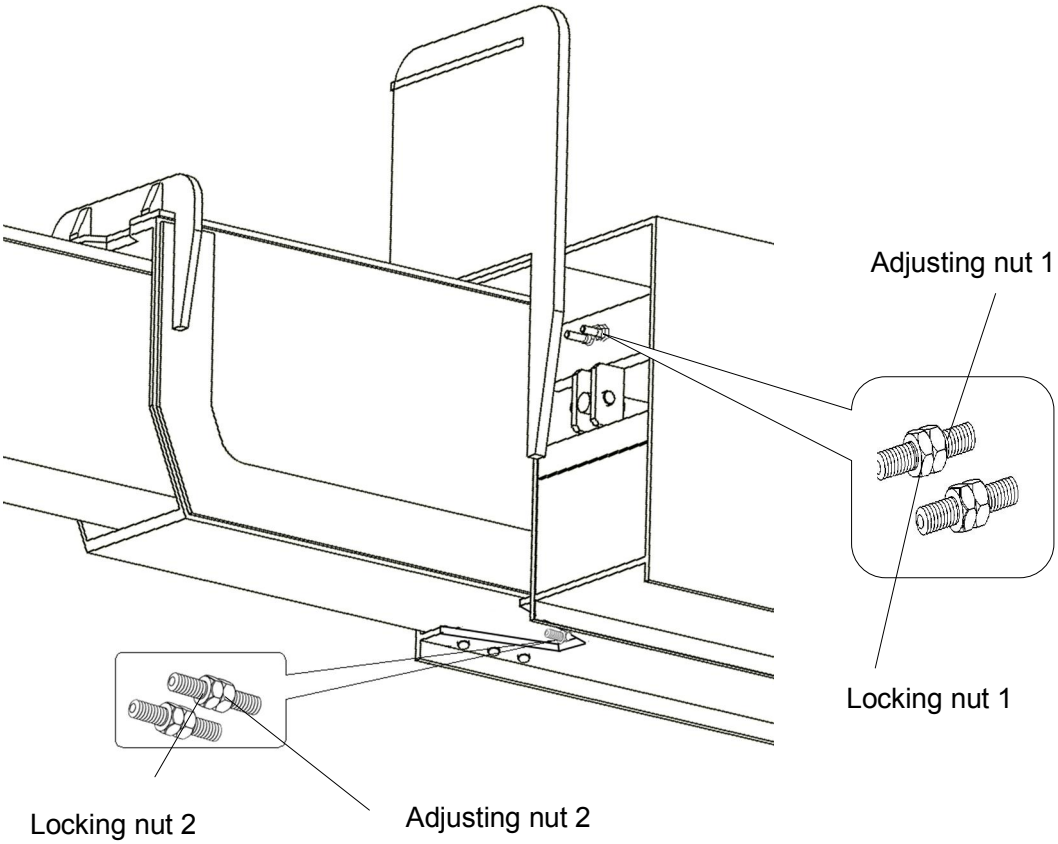

7.5.8.1 Rectifying the wire rope for outriggers extension

Troubleshooting:

- The outriggers cannot be fully extended after the horizontal cylinders are fully extended.
- The wire rope for extending sliding beam section 2 is not properly rectified.

Rectify the wire rope according to the following steps:

1) Make the crane in driving-state (with the outriggers retracted);
2) Unscrew the locking nut 1 and then screw down the adjusting nut 1 until the wire rope is tightened.
   Tool used: spanner

Caution:

Do not over tighten the adjusting nut 1; otherwise the wire rope will be over-tightened. Re-tighten the locking nut 1 after adjustment.

7.5.8.2 Rectifying the wire rope for outriggers retraction

Troubleshooting:

- The sliding beam section 2 cannot be fully retracted after the horizontal cylinders are fully retracted.
- The wire rope for retracting sliding beam section 2 is not properly rectified.

Rectify the wire rope according to the following steps:

1) Support the crane on firm and flat ground with outriggers fully extended;
2) Unscrew the locking nut 2 and then screw down the adjusting nut 2 until the wire rope is tightened.

Caution:

Do not over tighten the adjusting nut 2; otherwise the wire rope will be over-tightened. Re-tighten the locking nut 2 after adjustment.

Caution:

1) The wire rope cannot be rotated during tightening nuts;

2) The wire rope will wear gradually and it will be very dangerous if neglect its wearing condition and continue using it. According to safety rules for vehicles, such as crane, etc., the following items are stipulated:

(1) There is 10% broken rope in one strand (excluding the break caused by damage to the rope core);

(2) The diameter is reduced by more than 7% of its nominal diameter;

(3) The wire rope is reverse bent or knot;

(4) The wire rope is seriously deformed; rope core is revealed, birdcage deformed and is in corrosion;

The wire ropes must be taken down before they reach the above 4 stages.

(5) Tension caused by rope coming out from the pulley;

(6) Damage caused by heavy objects;

(7) Damage caused by electric welding or gas welding;

(8) Damage caused by short circuit;

(9) Damage caused by the effect of heat.

The wire ropes can be taken down before they reach the above 5 stages according to the wearing conditions.

7.5.9 Tires / wheels

7.5.9.1 Inflating the tires

Before inflating the tires, ensure that the following prerequisites are met:

- the tires are correctly fitted to the disk wheel
- the clamp collar is correctly seated
- the maximum permitted tire pressure must not be exceeded
- check tire inflation pressure on cold tires

Danger:

1) Damaged tires, insufficient air inflation or the same tire with different pressure may cause increased accidents!
2) When checking the tire inflation pressure on the vehicle or when replacing tires, please ensure beforehand that the clamp collar is correctly assembled on the disk wheel. Otherwise, risk of accident! If the clamp collar is not correctly seated, please obtain the assistance of a specialist. Check that disk wheels are in correct working order before starting to drive the vehicle.

7.5.9.2 Changing the wheel

The wheel is one of the most important safety components on the vehicle. For this reason, please check the wheels at the rim and the disk wheel for the following conditions when changing the tires:

- Excessive rust or corrosion
- Bent disk wheel flanges
- Cracks in the disk wheel
- Cracks in the wheel spoke
- Damage to wheel clamp collars
- Damaged wheel pins, nuts and worn out pin holes
- Matching disk wheel parts

● If damaged disk wheel parts are discovered during checking:
Remove them and replace them with new parts;

● If paint damage or minor rust formation is found:
Make good the wheels by removing the rust using commercially available paint. Pay special attention to having a perfect surface in the tire seating area.

Danger:

No welding work is permitted on rims and wheel disks, particularly repairs to worn pin holes and changing disk wheel. Disk wheel with worn pin holes must be discarded immediately. Repairing these highly-stressed disk wheel components causes structural transformations in the material which can lead to premature overload breakage.

7.5.9.3 Checking the axle alignment

The axle alignment must be checked at regular intervals. Failure to perform this check can result in increased tire wear. If extremely high stress has occurred such as driving against curbs, it is extremely important to check the axle alignment.

Depending on the tire profile, different wear patterns occur based on where it is located. Tire rotation is recommended to ensure that all the vehicle's tires wear uniformly. Tires should be rotated as soon as uneven wear patterns are detected. We recommend intervals in the range of 6 months or 5,000km. This process has a positive impact on driving comfort and tire life.

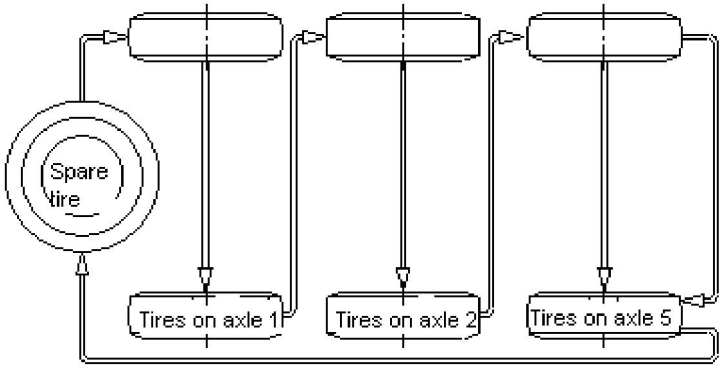

Illustration – Tire rotation on axles 1, 2 and 5

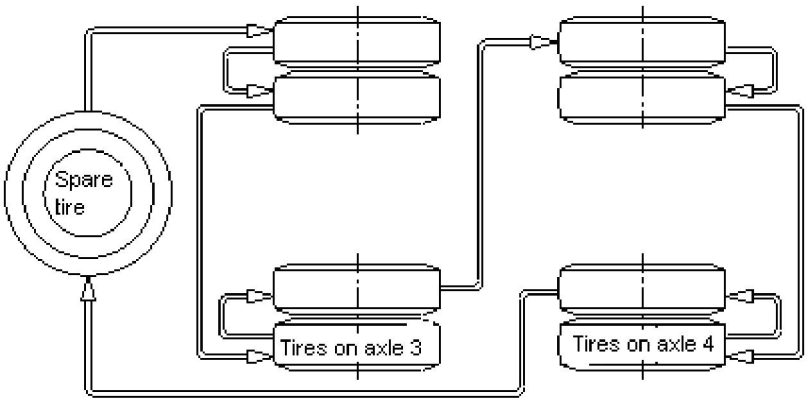

Illustration – Tire rotation on axles 3 and 4

Caution:

Always have the axle alignment adjusted by a trained expert with special equipment.

7.5.9.4 Limit of vehicle speed

As the maximum vehicle speed of tires is limited (The maximum vehicle speed of Michelin tires used on our crane is 80 km/h), never overdrive. Otherwise, the tires will be overheated and their service lives will be shortened. Excessive driving speed is also harmful for maintenance and service of the vehicle.

Do fix your attention on driving. Get out of the way from obstacles (e.g. holes in the ground) in the front. Slow down to drive over if they cannot be avoided.

7.5.9.5 Storage of tires / wheels

Tires / wheels must be placed vertically. They should be stored in cool and dry places instead of exposing in the air to prevent them from ageing.

Tires are made of rubber. Do not contact them with chemical substances such as oil, acid and hydrocarbon during driving, parking or storing to avoid corrosion, deformation and softening.

Tire projecting rims or tire bead toes should be protected during transportation and installation, so as to keep its tightness.

7.6 Transportation and storage

7.6.1 Transportation and its points for attention

The crane can be driven by its power or be transported by train or any other carriers for a long distance. During transportation, the wheels should be blocked with wooden wedges, and the complete vehicle should be secured with wire ropes. Lock the doors and the windows, and take preventive measures against rain. The lifting positions are shown in the following illustration:

Warning:

Slings must be of enough strength!

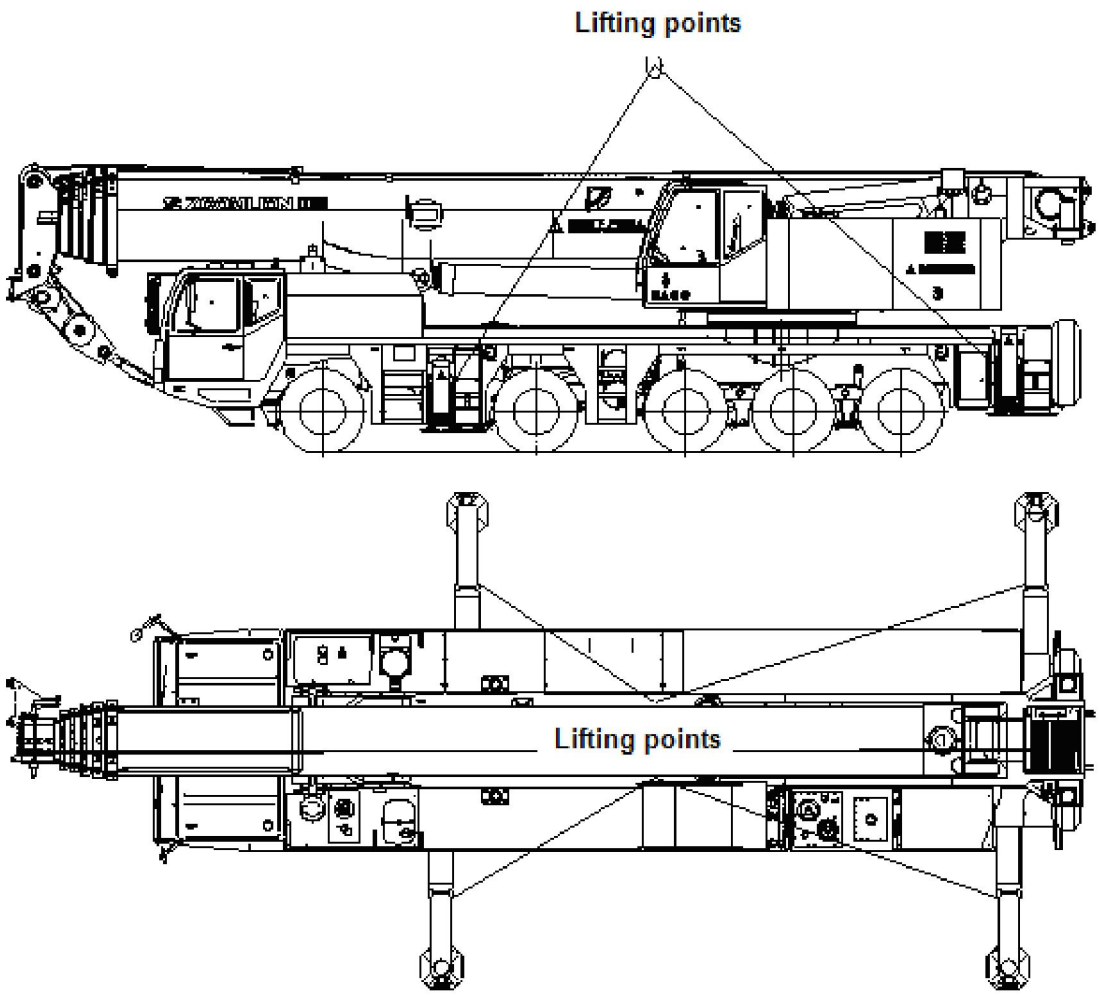

Extend the 4 outriggers. Secure the 4 outriggers with the lifting rope lock and take it as the lifting point.

Note:

Wire ropes should not contact the crane directly; otherwise the crane would be scraped.

7.6.2 The storage conditions and the points for attention in storage

If the crane is not put into use for a long time (over 3 months), the following protective measures should be taken:

1) Wipe off dust and oily filth to keep the crane clean;

2) Retract all the piston rods of the cylinders to their Min. length;

3) Inflate the tires to specified pressure and put wooden blocks beneath the tires to keep them away from the ground;

4) Demount the battery and keep it in a dry and ventilating place. Charge it periodically;

5) The surfaces of all exposed components should be greased to prevent them against corrosion and rust;

6) Clean dust and sand from wire ropes and grease them with lubricating oil;

7) The crane should be stored in a garage. If not, it must be covered with water-proof cloth to prevent it against corrosion. In the rainy season, check the crane frequently to prevent it against rain leakage and corrosion and rust. In winter, antifreeze measures should be taken;

8) Start the machine once a month and operate all the mechanisms at idle speed to check whether they work normally;

9) Assign a person to keep the crane in the perfect condition to make it ready for operation at any time;

10) For the crane which has been stored for more than three months, run it at idle speed for at least an hour every three months and carry out cleaning and maintenance periodically. As for the crane which has been stored for more than one and half years, besides routine cleaning and maintenance, replace the aged sealing elements.

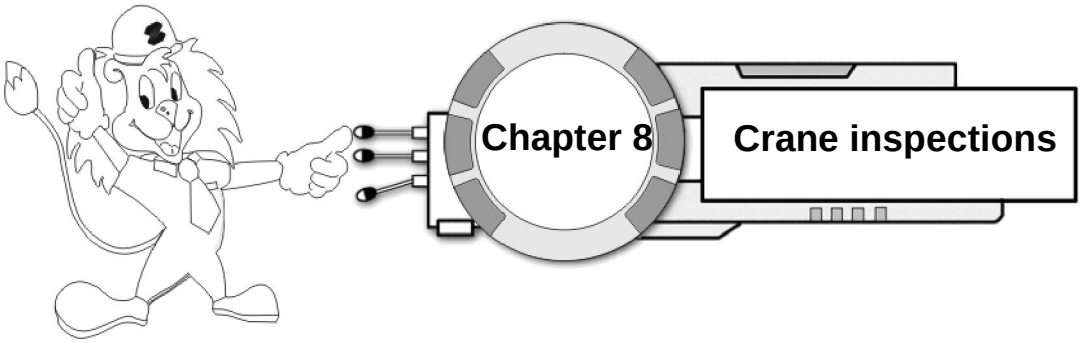

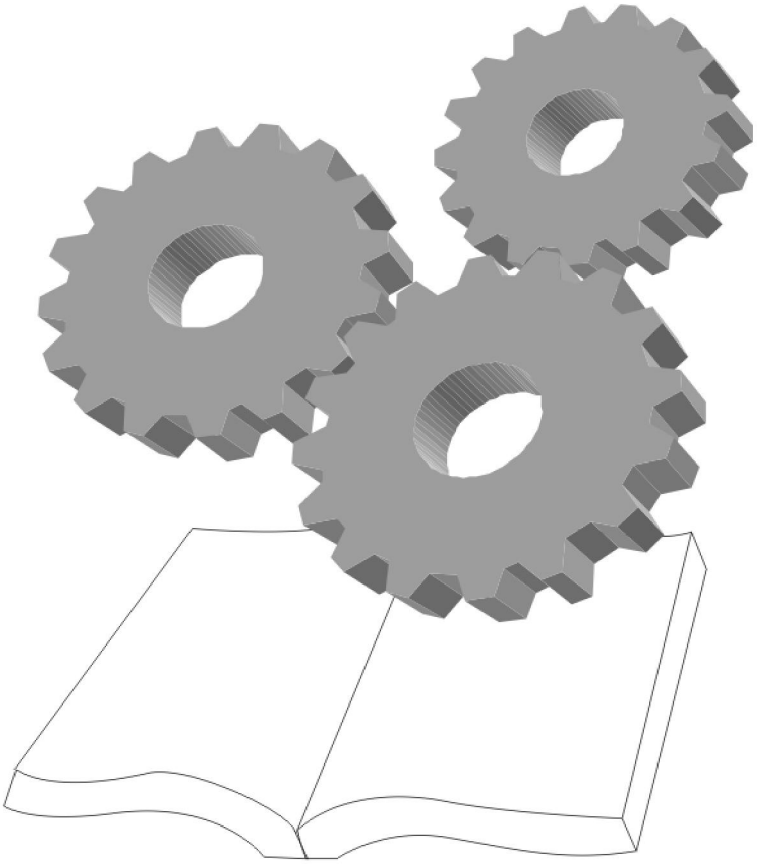

ZOOMLION

8.1 Re-inspections

8.1.1 General

This crane was tested and commissioned at the manufacturer's facilities prior to shipment in accordance with the latest national standards.

The safety level achieved during initial commissioning may not be attainable during operation.

Examples of the root cause of such deviation include; e.g., wear and tear, corrosion, effects of forced operations, changes in the environment and changes to the mode of operation.

The operator is responsible for taking the necessary steps to ensure that the maximum level of safety is maintained. After it has been licensed, the crane operator must have the crane inspected by a competent inspector, as necessary. The inspection frequency varies with the application situations and the operating conditions, but the minimum interval is one year. See: GB3811, GB/T6068.

If the crane is sold to other countries or regions, local standards can also apply. The crane must be inspected by an authorized inspector every four years after it has been licensed. After the 12th year of operation, the crane must be inspected annually by an authorized inspector.

Warning:

There is a risk of weakening the supporting components when major changes or repairs are made to the crane!

In such cases, the operator must have the crane inspected by a competent inspector before putting it back into service.

A competent inspector is someone who has a thorough understanding of cranes based on technical training and experience and is knowledgeable about the relevant national occupational safety regulations, accident prevention regulations and generally accepted engineering principles and is able to assess that the crane is safe to operate.

A professional engineer is someone who has rich experience in designing, manufacturing and maintaining lifting equipment (e.g., crane) and is knowledgeable about the relevant regulations and standards and is able to use necessary equipment to inspect, so as to access whether lifting equipment are safe and to determine what measures to be taken.

Re-inspection of crane is principally a visual inspection, wherein the inspector and engineer appraise the condition of the crane and its components. The purpose of the inspections is to prevent accidents by detecting deficiencies in a timely fashion. Any deficiencies determined by the inspector and engineer must be documented, corrected, and subsequently solved.

A number of important examples of items that are particularly important during the periodic crane inspections are listed in the following: We wish to advise that only competent inspector and professional engineer take sole responsibility for the inspections that they carry out. This chapter does not necessary cover the entire scope of the inspections.

A checklist for periodic inspections recommended for ZOOMLION truck cranes and all-terrain cranes is included in the appendix to assist the inspectors.

If the inspector has any questions, they should be directed to ZOOMLION's service department or other relevant departments.

Danger:

Risk of accident!

Adhere to the following inspection guidelines and intervals.

8.1.2 Steel bearing structures inspection

Steel bearing components such as telescopic booms, slewing tables, chassis frame, outriggers and rims must be carefully inspected, at the very least during the annual recommended crane inspections. Even though weld joints are not normally situated at maximum load locations, it is nevertheless important that they be inspected with particular care during the periodic inspections.

If the crane was subjected to excessive operating loads; e.g.; due to an unusual impact, the load-bearing components must be inspected immediately. If damages (e.g., cracks) are apparent in any part of the steel structure, the total extent of the damage must be determined by qualified specialists using appropriate material test methods: e.g., ultrasound or X-rays. The specialists should then advise whether or not the damaged area can be repaired by welding or other means.

The following diagrams are samples of the load-bearing weld designs. The welds or steel structural zones that require inspection may be present more than once and in various forms. The joints or zones must be inspected all around at the locations identified by arrows.

Warning:

The scope and extend of all inspections remain the sole responsibility of the inspectors. The following diagrams are provided to assist the inspector. The diagrams are only examples and are not necessarily 100% complete!

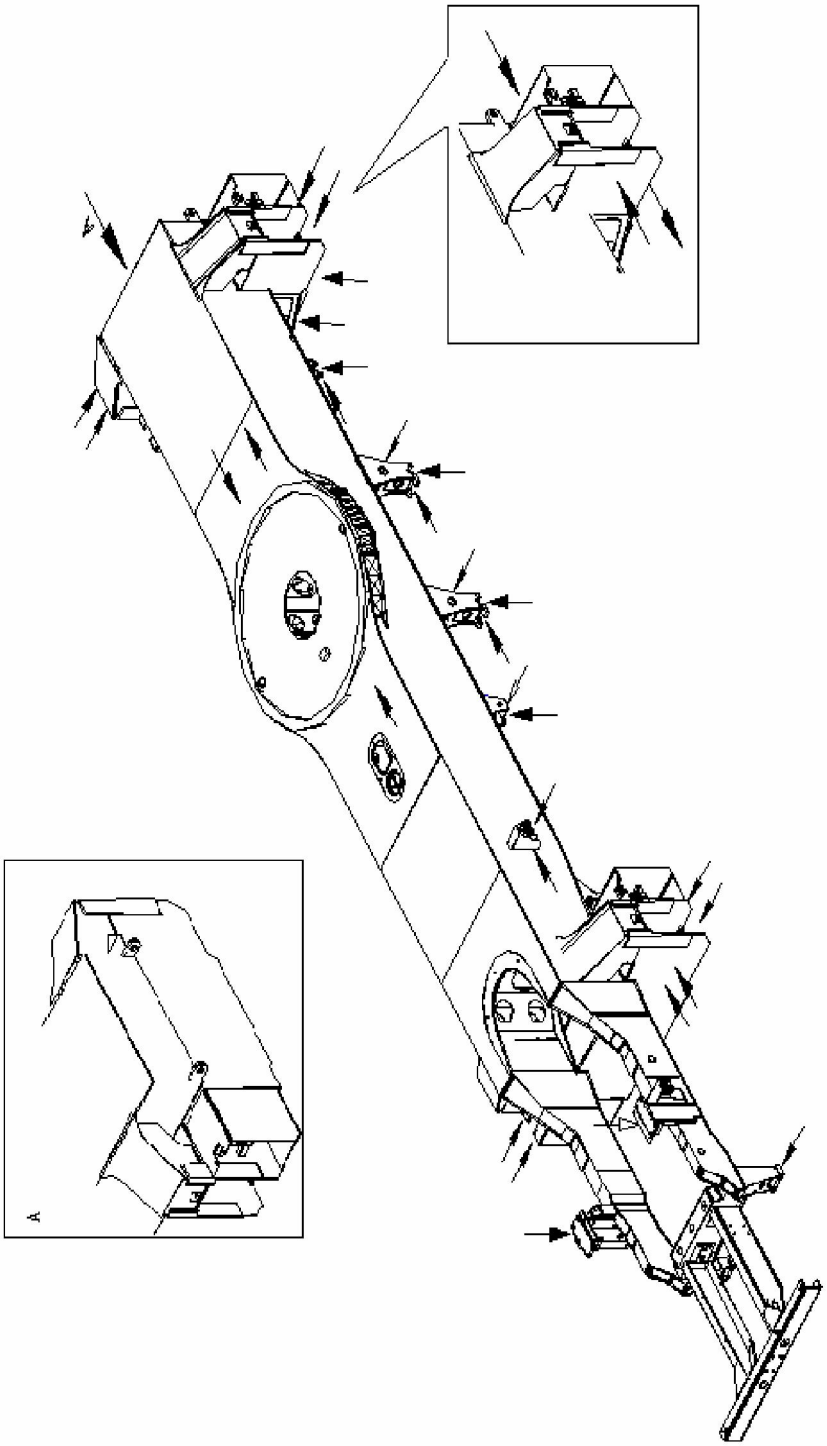
A
A

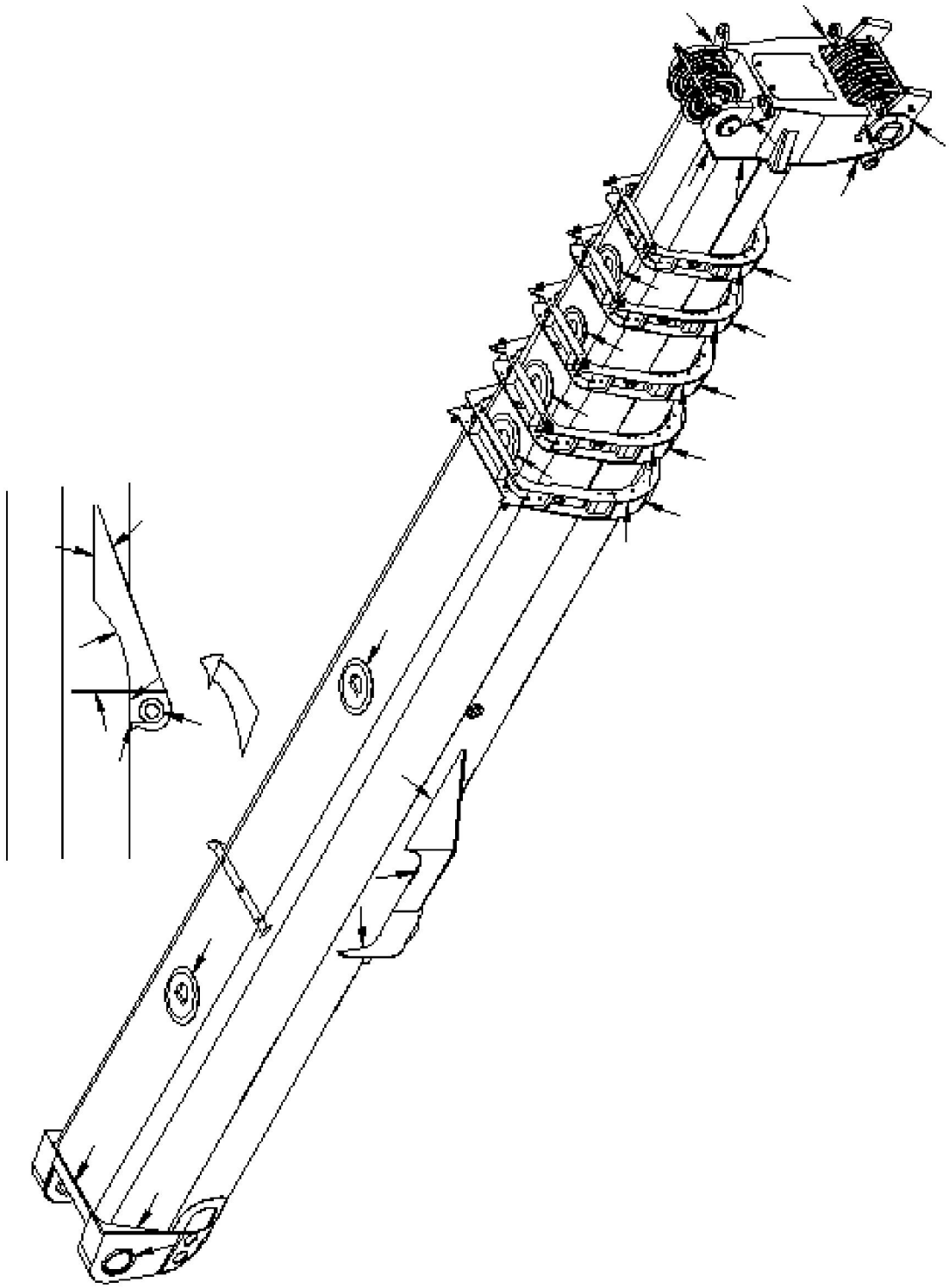

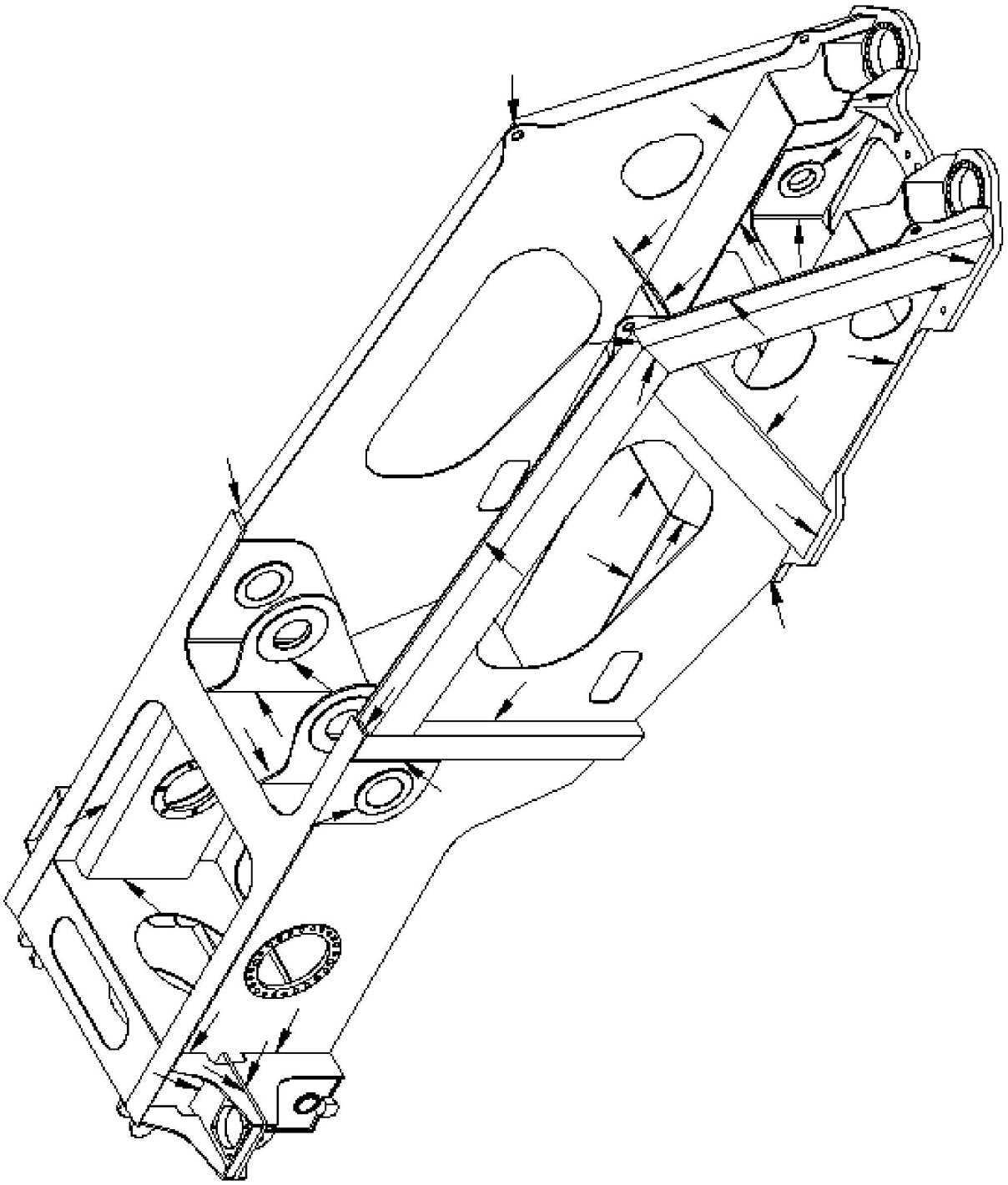

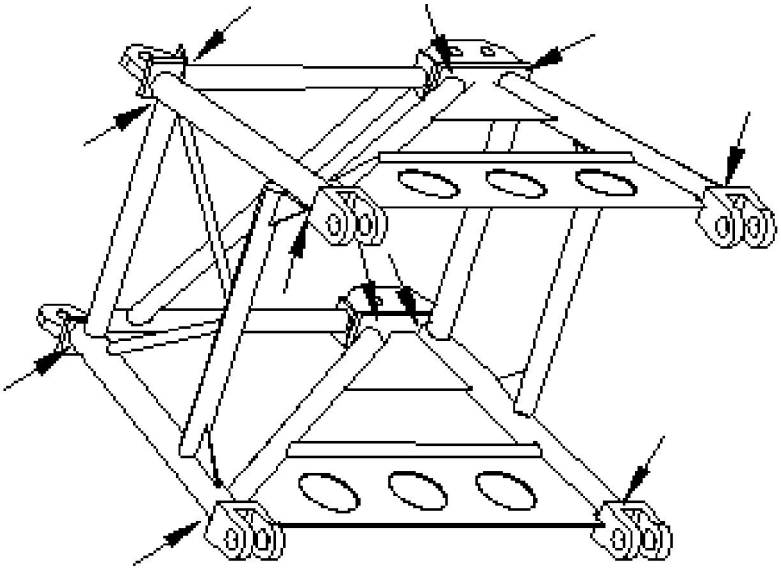

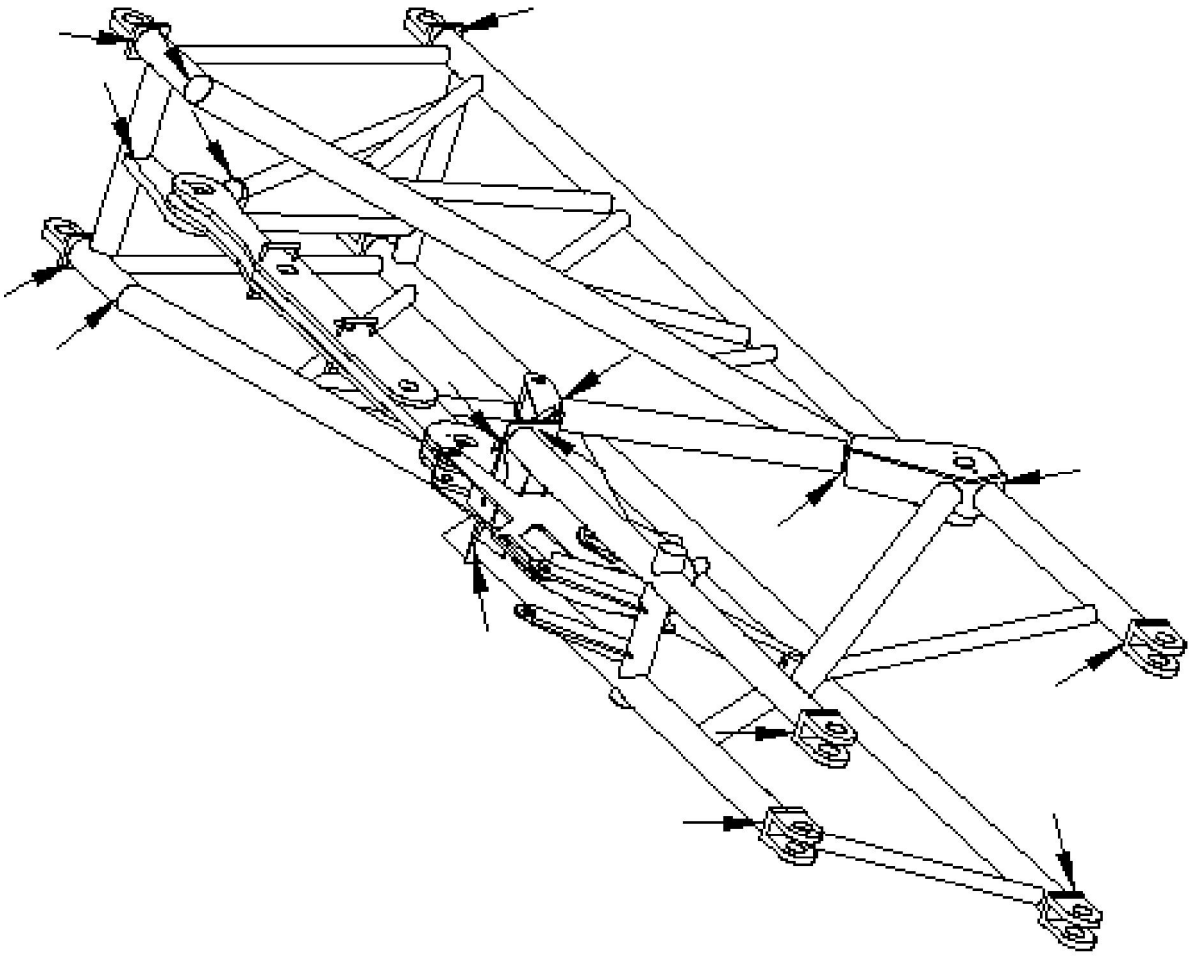

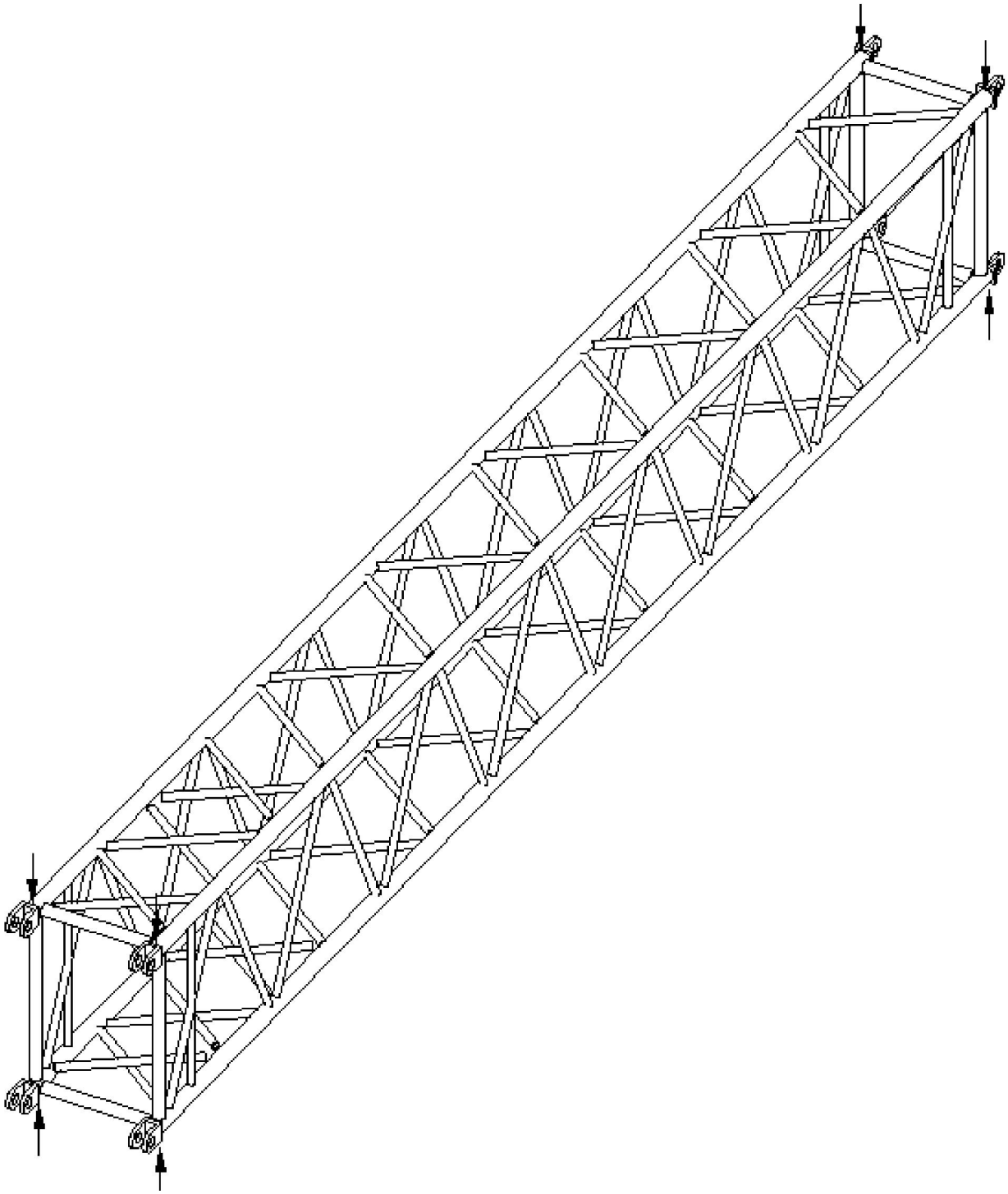

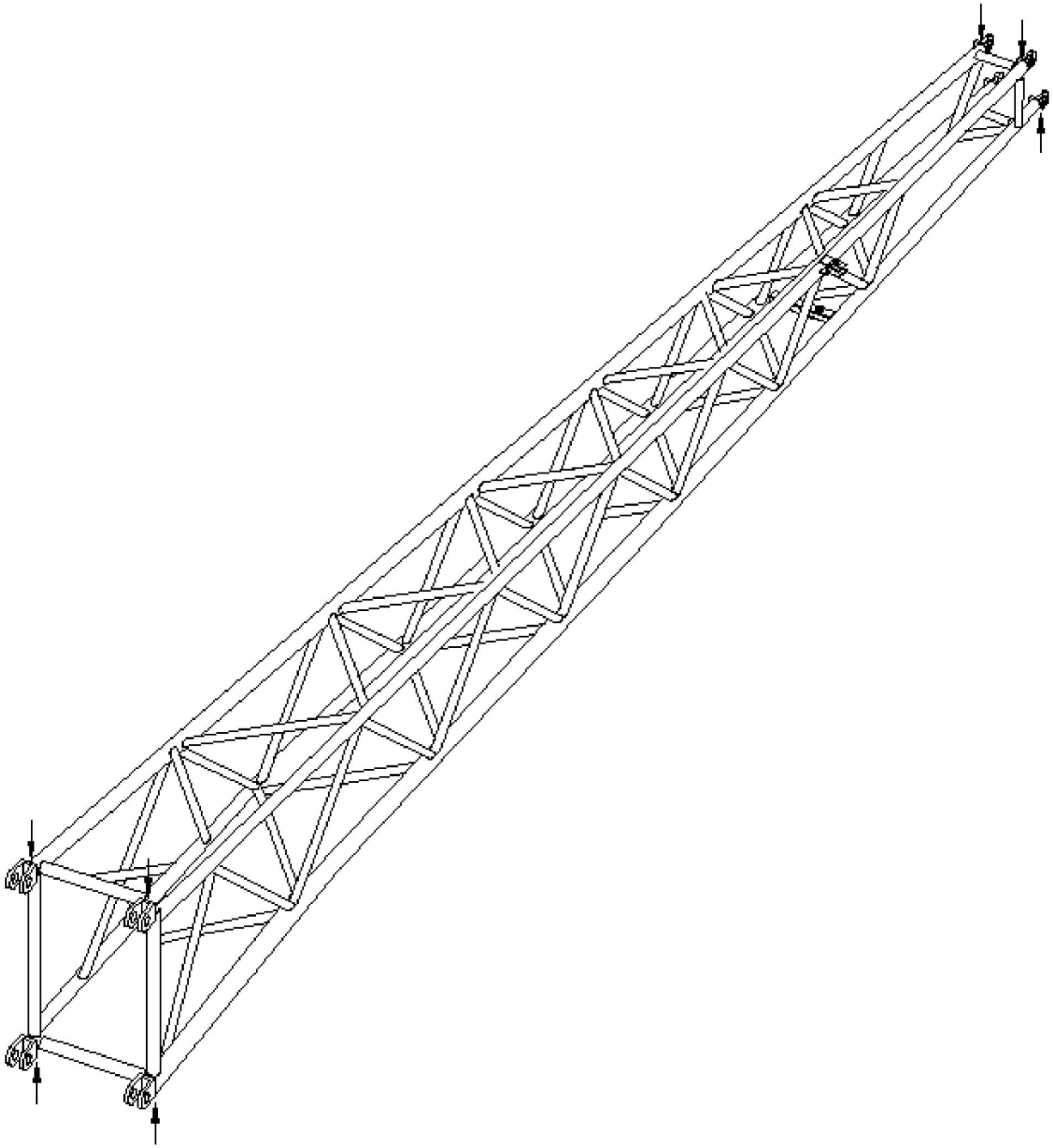

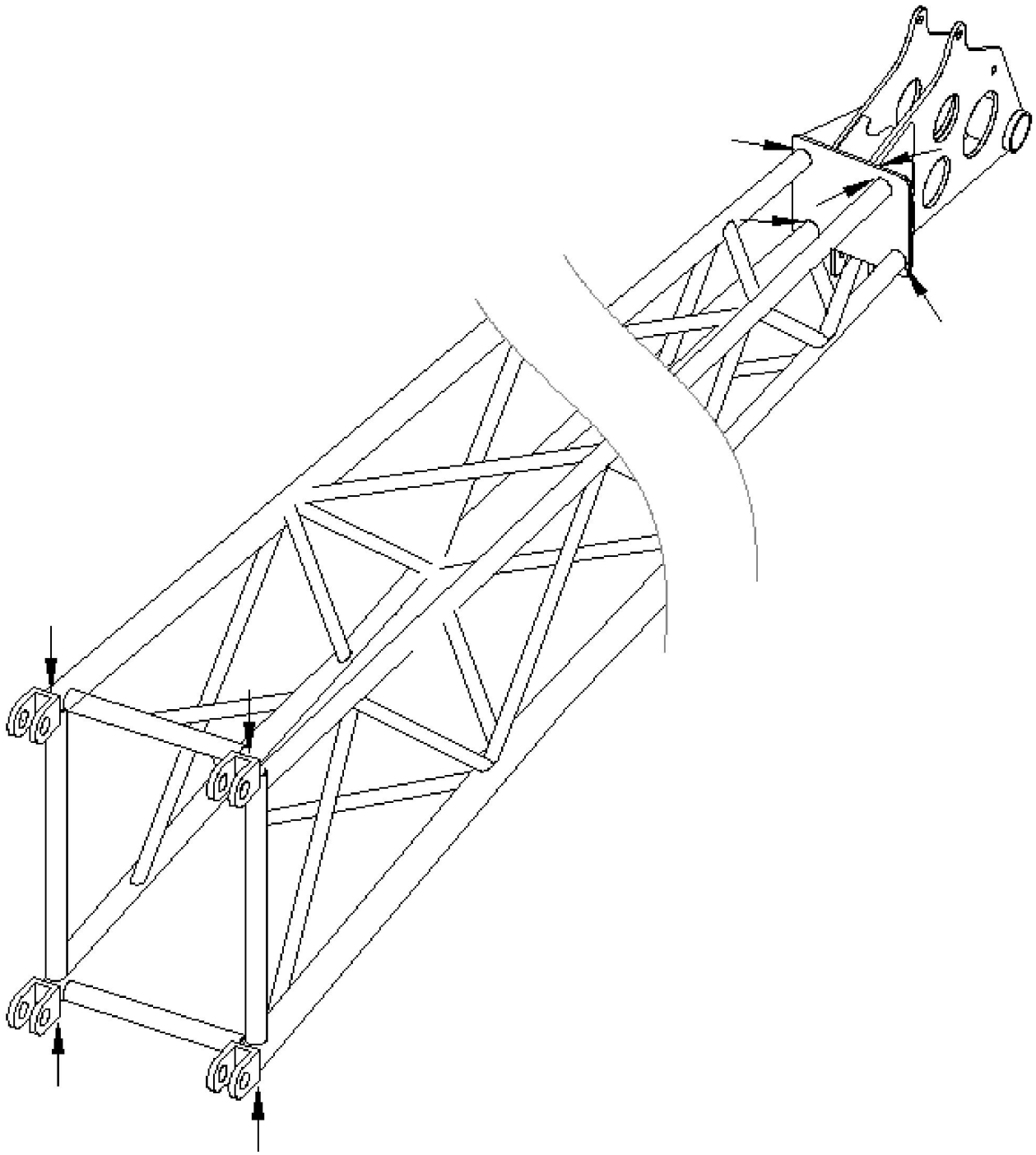

8.2 Periodic crane inspections

8.2.1 Inspection during break-in period

Perform the following inspections and maintenances after 200 hours of lifting operation.

a) Check the engagement of gears inside hoisting and slewing boxes. Change lubricating oil and clean these boxes.

b) Drain out hydraulic oil, clean hydraulic oil tank, and change filter cartridge, filter or change hydraulic oil.

c) Clean dust and oil on each part of the complete vehicle, and check each assembly for leakage of oil, water, gas and electricity. Adjust and repair them.

d) Check that connecting bolts for each part are properly seated.

e) Check and rectify all safety devices.

Sliding blocks of the crane should be inspected for wear per half year. Adjust or change them when necessary.

According to the changing of season and temperature, change lubricating oil inside the engine, transmission, transfer gearbox, steering gear and reducer for hoisting mechanism and reducer for slewing mechanism. Dismantle, inspect and clean cooling system and inspect proportion of battery electrolyte.

8.2.2 Inspecting the rims

The wheels, and therefore the rims, are important vehicle safety related components. They must be tested in accordance with Chapter 8.1.2 “Steel bearing structures inspection” in this chapter. Furthermore, compliance is required with “Maintenance manual for crane chassis”.

In addition, rims must be checked for crack at the very least during the annually specified crane inspection. Immediately replace any rims that show evidence of cracks or crack formation.

After driving a maximum of 40,000 km, the operator shall routinely inspect the rims, regardless of the actual duty cycle they were exposed to.

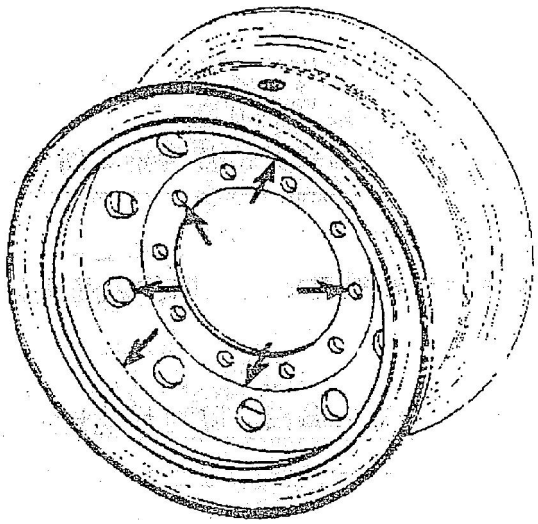

8.2.3 Inspecting the brake systems

The brake system on cranes must be inspected annually.

8.2.3.1 Structural inspection

Check that the following requirements are met:

a) Pipe and hose lines are not damaged, not corroded and are properly routed;

b) Devices are properly installed and fastened;

c) The air pressure tank is not damaged and no external corrosion is visible;

Warning:

No welding nor heat treatments be conducted on the tank walls.

d) Water has been removed from the air pressure tank;

e) Each connection in the pipe lines are proper connected, moving parts are flexible and are not damaged;

f) The brakes are properly adjusted.

8.2.3.2 Function and performance test

a) Function test

   1) Air pressure regulation;

   2) Check for leaks of system and pressure of air pressure tank;

   3) Check safety valve, switch for air pressure signal lamp and warning device;

b) Performance test

   1) Check the function of the brake:

      Press down the brake pedal: Friction linings contact the brake drum.

      Release the brake pedal: Friction linings immediately return to their starting position.

   2) Check effectiveness of brake:

      – Measure brake path

        At an applied pressure of 8bar and initial speed of 30km/h, the brake path should be smaller than 10m.

      – Determine brake performance on brake test bench

8.2.3.3 Inspection intervals for brake

Check the following items in regular intervals besides function test and performance test:

- Check the condition of the friction lining every 3 month;
- Dismantle brake drum and check the condition of each component inside the brake every 12 months.

Warning:

Do not brake after dismantling the brake drum.

a) If the remaining lining thickness is less than 1mm (thickness of the new friction lining is 18mm) from rivet, it is imperative that the friction linings (friction pad) are replaced; Replace worn or oily friction lining.

Danger:

Always replace all the friction linings on each axle simultaneously.

b) The operation of changing the position of brake drum:

Caution:

The diameter should not be over 0.75% of specified diameter during the operation of changing the position of brake drum.

Specified diameter:	410mm
Allowable position-changing dimension:	3.075mm
Allowable inner diameter:	413.075mm

Danger:

Replace the brake drum no later than when its inner diameter over 413.075mm. If this is not done, the brake drum can fail, which can cause fatal accidents.

c) Replace the springs, sealing elements and dust cover inside the brake at least every 2 years.

Danger:

All the brake maintenance and repair work may only be carried out by authorized and trained expert personnel! Danger of fatal accidents due to erroneous maintenance or repair on the brake!

d) Carry out a brake structure, function and performance test again on all wheels after completion of assembly work.

8.2.4 Inspecting the hoist and slewing mechanisms

The hoisting and slewing mechanisms are designed using integrated planetary reducers. The gearboxes are sized for long life and the propeller shafts and gear wheels are rated for endurance.

Even through the hoist and slewing mechanisms are designed for long life, an external visual inspection is not adequate, since their life can be significantly affected by bad maintenance, defective seals, improper operation or overuse.

The inspection must therefore be carried out by a competent inspector in accordance with the following requirements:

a) 1000 hours of operation, minimum once per year;

b) Inspecting oil level

For hoisting winch reducer, we recommend that the oil be drained and the amount compared to the specified oil quality;

c) Evaluating oil color

Assume that the oil has been overheated if it is black and /or a burnt oil smell is detected. Change the oil;

d) Evaluation of foreign substances found in the oil

If gear oil is polluted seriously, change it even if it has not reached the oil change intervals.

This inspection should be carried out by a qualified laboratory. The used oil shall be dribbled onto the specified woven filter medium. Visual inspection using a magnifying glass may reveal coarse particles. If particles are detected, all the oil's properties must be examined by a qualified laboratory.

The maximum permissible quantity of foreign material measured by weight is 0.15% of total oil weight and the quantity of all mechanical pollutants is not over 0.05% of total oil weight.

If above values are exceeded, check to determine the root cause of the excessive abrasion. Damaged components shall be replaced and fresh oil be refilled.

Warning:

Repairs may only be carried out by specialists with appropriate equipment knowledge.

e) Visual inspection

The reducer shall be checked for leakage, since loss of oil, in addition to polluting the environment, can lead to gear failure.

f) Inspecting the brakes

Check the brakes each time the drive devices are inspected.

If the brakes are invalid, they shall be dismantled to determine the cause. Do not use the crane until the failures are removed. Whenever a planetary drive device is dismantled because of accumulated pollutants in the oil, the brakes shall also be inspected.

Warning:

Only qualified personnel with specialized knowledge shall be used to do the repair work.

g) Documenting the completed inspection and tests

The results of each inspections and maintenance work, including the contents, tasks and data, shall be documented by the competent or authorized inspector.

The “design life” is not equal to the real life of the mechanism. The actual life is affected by many additional outside factors, for example:

1) Overload;
2) Inadequate maintenance:
   - Oil is not changed in a timely manner
   - Using the wrong type of oil
   - Too much or too little oil
   - Contamination during oil changes
3) Improper operation: extreme acceleration or braking of the load;
4) Assembly errors during repair and maintenance;
5) Undetected leakage;
6) Incorrectly set safety devices or safety devices defects;
7) Extreme environmental conditions:
   - Extreme temperatures
   - Corrosive atmosphere
   - Dust and dirt

Caution:

The reducers must be repaired after using for 10 years.

8.2.5 Inspecting the hooks

The hooks must be often inspected by a competent inspector.

The purpose of the inspections is to avoid accidents by detecting deficiencies in a timely fashion.

Any deficiencies determined by the inspector must be documented, corrected, and subsequently reinspected. Inspecting items are as follows:

a) The hook should be inspected for distortion as required, but at least once a year; e.g., at the hook jaw. Hook jaw distortion may not exceed 10% of the original dimensions. Do not use a hook that exhibits greater distortion.

b) The hook should be inspected for thread corrosion/wear and tear. Stop using the hook after finding it.

8.2.6 Inspecting the wire rope pulleys

Inspect the entire wire rope pulley assemblies for damage and crack at least once a year.

If wire rope pulleys are subjected to any impacts (e.g., with buildings) or are subjected to other outside forces other than load forces, they must be immediately visually inspected for damage or cracks.

Danger:

Risk of accident when damaged or cracked!

Replace wire rope pulley as soon as possible.

Also check for wear on the rope groove, replace the pulley if the bottom of the rope groove has been worn down more than 1/4 of the rope diameter.

8.2.7 Inspecting the crane wire ropes

Wire ropes shall be checked regularly. Strict inspection must be made to the ropes which are to be newly used after installation. Furthermore, if wire ropes are subjected to special tightening force or damages to ropes are invisible or damages just appear, particular attention must be paid to checking safety of wire ropes in the following aspects:

a) Type and number of wire breaks;

b) Position and time of wire breaks;

c) Rope diameter reduction during working;

d) External and internal wear, corrosion and deformation;

e) Damage caused by the effects of heat

f) Total time for being placed.

The take-down criteria refers to the Chapter “Maintenance and service”.

Furthermore, the rope end connections must be checked regularly for their reliability. Visible impression shall not be appeared at the contacting position between wire rope and drum and between wire rope and pulley.

Special attention must be paid after any events that may lead to changes to the rope and whenever the rope starts to be used again after being take down and then re-installed.

8.2.8 Inspecting the tightness of load carrying components

Check that the mounting bolts for the slewing ring, slewing reducer and winch reducer are properly seated at least once a year.

Slewing ring connection mounting bolts are pre-stressed at the factory, so that no loosening of the bolted connections will occur during normal crane operation.

However, the bolted connection may become overloaded and the bolts may be permanently stretched if the crane is overloaded or if a fixed load is pulled free. It is therefore important to check these bolts for proper seating during the annual crane inspection or after an overload has occurred.

Completely remove loose bolts, plus the two adjacent ones, and immediately check for damage.

Inspect the bolts, particularly for cracks or permanent distortion. Replace any bolts that have stretched more than 2% (referred to their original length) or that have cracks or other damage. If any bolts have stretched or are otherwise damaged, also replace the two adjacent bolts.

8.2.9 Inspecting the oil and fuel reservoirs

Oil and fuel reservoirs shall be inspected at least once a year and checked all around for leakage during the periodic inspections every year.

Repairs shall only be carried out by trained and knowledgeable specialists.

Improper repairs; e.g., welding, hard or soft soldering is not permitted, particularly if the Customer Service Department at ZOOMLION has not been consulted!

8.2.10 Inspecting the hydraulic system

Check whether all elements and pipe lines in the hydraulic system are in good condition from the following aspects:

a) Check whether mounting bolts for hydraulic pump are properly seated, and whether abnormal vibration, noise and leakage occur during load application;

b) Check whether air filters in hydraulic oil tank and oil return pipe line are blocked and whether oil inlet/outlet of flange leaks oil;

c) Check whether slewing and hoisting motors leak oil, stop running or run abnormally, and check their housings for deformation and cracks;

d) Check each connection at pipe lines in the hydraulic system for tightness and oil leakage; check pipe clamps for tightness and cracks; check hoses for aging, distortion and damages;

e) Check motions:

   1) Check connected oil pipe fittings for proper seating;

   2) Check mounting bolts for proper seating;

   3) Check for leaks.

f) Check hose drum:

   1) Check mounting bolts for proper seating;

   2) Check whether telescoping out /in motions are seized;

   3) Check for leaks.

8.2.11 Inspecting the electrical system

Regular inspection can not only prolong service life of the vehicle, but also can improve safety and comfort for the operation of vehicle.

Regularly inspected components listed in the following table are for vehicles which work in dustless environment for 250h per month in temperatures between -10 – 35℃. Once the crane is used in harsh conditions or is used in coastal, desert and cold region, shorten the inspection and maintenance intervals according to actual conditions.

Component inspected	**Inspection interval**								
	New vehicle		Every month	Every three months	Every six months	Every year	Every 250 hours	Every 500 hours	Every 1000 hours
	60 hours	250 hours							
Electrical system									
Battery acid levels	○	○	○						
Battery acid proportion				○					
Starter commutator and electrical brush					○				
Generator						○			
Caution: Dismantle and inspect the starter and generator, and then replace damaged components. The process of assembly, disassembly, dismantling and re-assembly should be preceded carefully and stably, and proper tools should be used in an attempt to avoid causing damages to them.									
Check electrical wiring joints for tight fit and damage			○						
Check lighting system for its function and damage		○	○						
Check horn, air conditioning, heater and defroster for their functions	○	○	○						
Check wiper, windshield water-injector for their functions and liquid quantity	○	○	○						
Check each instrument and control lights for their functions		○	○						
Check every type of switches for functional work			○						

Component inspected	Inspection interval								
	New vehicle		Every month	Every three months	Every six months	Every year	Every 250 hours	Every 500 hours	Every 1000 hours
	60 hours	250 hours							
Check displacement sensor for its waterproof property			○						
Check cable drum for its waterproof property and check whether it is seized			○						

Note:

Check the component marked with “○" within corresponding intervals.

8.2.11.1 Key inspection and maintenance

a) Battery

Superstructure and chassis are all equipped with two batteries connected in series (12V for each battery). Single wire system is adopted in the complete vehicle and the negative terminal is grounded through main power switch. Batteries of this vehicle meet the national standard GB5008.1-85.

In normal situations, if there are no malfunctions in electrical devices, batteries are charged when the generator is supplying electricity for electrical devices.

If the battery is found not be charged or under-charged which has affected the starting of starting motor, the generator and the voltage regulator should be inspected to release the defects immediately.

Furthermore, keep batteries surface dry and clean. Clear off contamination and electrolyte with a piece of cloth dampened with 10% density soda water and wipe them with a piece of dry cloth.

If the crane is not in use for a long time, remove the batteries and charge them once every month. If it is not used within one month, cut off the circuit to avoid self-discharging.

b) Starting motor

Starting motor is a key component for the starting of engine. Therefore, often inspect fastener of starting motor for firm connection, inspect conductive wire for tight contact and inspect insulation of conductive wire for damage.

Clear off contamination and grease it for corrosion protection.

In addition, remove dust cover from the motor regularly to inspect whether surface of the commutator is smooth, whether carbon brush inside the bracket is seized, and whether pressure of carbon brush spring is normal and clear off accumulated dust.

Once the carbon brush wears excessively or surface of commutator is burnt seriously or other failures occur, remove it to repair.

c) Generator

Integrated commutating and pressure regulating type

Rated operating current: 80A

Voltage: 28V

Maintenance should be applied to the engine every 1000 hours. Clear off dust and oil on the surface of generator (especially on the terminal post), keep ventilation channel on, often observe contact condition of carbon brush ring and check carbon brush for wearing and tightening condition. Do not use megohm meter or power higher than 30V to test the engine and only use universal meter to detect it.

d) Displacement sensor

Displacement sensor is a key component in telescoping system.

Lay down the boom to check it at the tail end of the boom. Inspect its three coiling-out holes for their waterproof property. (Only use one of the three holes, and connect the other two with a small section of shielded wire to prevent water from entering); put the coiling-out port of waterproof rectangular 5-core plug face down and tighten all the waterproof PG connector; check screws on the end cover for proper seating; check that the coiling-out height of displacement sensor must be consistent with the height of fixing end for bracing wire and no inclined pull occur in vertical and horizontal directions.

e) Cable drum

Cable drum is a key component in telescoping system.

Lay down the boom to check it at the tail end of the boom. Check that the coiling-out height of cable drum must be consistent with the height of fixing end for cable and check friction between cable or bracing wire and pin removal plate. Check the coiling-out position at the fixing end of cable for completeness of waterproof cement; check waterproof rectangular 16-core connector connected between this cable and slewing table harness for reliable connection and tighten waterproof PG connector at two ends; check whether cable drum is seized when the boom is telescoped-in slowly.

8.2.12 Inspecting the safety devices

Function test shall be carried out on safety devices, such as load moment limiter, hoisting limit switch and lowering limit switch before each operation of crane.

a) The inspection of load moment limiter can be carried out as follows:

- Telescope out the boom to its maximum length; Use hook as the testing weight. Lift the boom from its minimum working radius to its maximum working radius; Check the display of weight in load moment limiter to ensure that weight deviation does not exceed 5% of load weight.
- Telescope out the boom to its maximum length; Measure actual radius at its minimum working radius; Measure the actual radius at its 45°; Compare the two values; and the deviation between them shall not exceed 10%.

b) The inspection of hoisting limit switch can be carried out as follows:

- Install hoisting limit switch and lift the hook without load slowly.
- Do not stop lifting until the hook reaches the limit weight of hoisting limit switch.
- Observe whether the hoisting limit switch is activated.

c) The inspection of lowering limit switch can be carried out as follows:

- Telescope out the boom to its maximum length;
- Lift the boom to its maximum angle and reel off the wire rope slowly;
- Require another person to observe rope guiding condition;
- Check whether the lowering limit switch is activated when only 3 hoist rope windings are left on the winch.

Check main / auxiliary winch in the same method.

Danger:

Risk of serious accident due to abnormal operation of safety devices!

Appendix: inspection checklist

Inspection category 1: Crane document						
Component inspected	A	B	C	D	E	Comments
Maintenance manual						
Operating instructions						
Spare parts catalog						
Attached spare parts list						
Attached tools list						

Inspection category 2: Signs / labeling						
Component inspected	A	B	C	D	E	Comments
Factory name plate						
Operating specifications label						
Warning labels and instructions						
Other safety labels						

Inspection category 3: Driving and traveling mechanism						
Component inspected	A	B	C	D	E	Comments
Chassis frame						
Slewing bearings						
Axles						
Wheels						
Tires						
Bearings						
Transmission						
Propeller shaft for universal-joint						
Leaf springs						Non hydro-pneumatic suspension axle
Shock absorbers						
Steering						
Brakes						
Hydro-pneumatic suspension						

Inspection criteria:

A: preset / complete B: condition / maintenance C: function

D: repair / replace E: re-inspection required

Assessment: Satisfactory = × Unsatisfactory = — Not required = 0

Inspection category 4: Chassis						
Component inspected	A	B	C	D	E	Comments
Platform						
Treads						
Counterweight holders						
Attached tools						
Ladders						
Fixing device for hook						
Boom bracket						

Inspection category 5: Chassis - driver's cab						
Component inspected	A	B	C	D	E	Comments
Doors						
Windows (curtain)						
Windshield wipers						
Rearview mirror						
Seat						
Air conditioning, air venting device						
DVD player						
First-aid kit						
Emergency lamp						
Warning triangle						
Warning & protecting label						

Inspection criteria:

A: preset / complete B: condition / maintenance C: function

D: repair / replace E: re-inspection required

Assessment:

Satisfactory = × Unsatisfactory = — Not required = 0

Inspection category 6: Chassis - driving						
Component inspected	A	B	C	D	E	Comments
Engine						
Exhaust system						
Fuel tank						
Fuel filter						
Soundproofing						
Engine mounting						
Oil levels						
Fuel lines						

Inspection category 7: Chassis - hydraulic system						
Component inspected	A	B	C	D	E	Comments
Oil reservoirs						
Hydraulic oil filters						
Pumps						
Motors						
Valves						
Piping						
Hoses						
Pressure relief valves						

Inspection category 8: Chassis - air pressure system						
Component inspected	A	B	C	D	E	Comments
Air compressor						
Air reservoir						
Valves						
Piping						
Hoses						

Inspection criteria:

A: preset / complete B: condition / maintenance C: function

D: repair / replace E: re-inspection required

Assessment:

Satisfactory = × Unsatisfactory = — Not required = 0

Inspection category 9: Chassis - electrical system						
Component inspected	A	B	C	D	E	Comments
Motors						
Generators / Alternators						
Battery						
Wiring						
Fuses						
Resistors						
Lighting						
Brake lights						
Indicator lights						
Tail lights						
Working lights						
Signaling devices						
Monitoring lights						
Battery switch						
Limit switches: drive devices, steering, driving						
Outrigger pressure indicator						

Inspection criteria:

A: preset / complete B: condition / maintenance C: function

D: repair / replace E: re-inspection required

Assessment:

Satisfactory = × Unsatisfactory = — Not required = 0

Inspection category 10: Chassis - control systems						
Component inspected	A	B	C	D	E	Comments
Engine speed regulator						
Drive device						
Clutch						
Shift of gear						
Brakes						
Steering						
Monitoring indicators						
Engine braking performance						
Outrigger controls						
Axle suspension						
Crane leveling						
Rear axle steering						

Inspection category 11: Superstructure						
Component inspected	A	B	C	D	E	Comments
Telescopic boom						
Slewing table						
Counterweights lifting device						
Counterweights						
Positioning device for slewing table						
Slewing ring: Tilting free play						
Slewing ring: Mounting bolts						
Slewing ring: Gearing						
Slewing reducer: Mounting bolts						
Slewing reducer: Gearing						

Inspection criteria:

A: preset / complete B: condition / maintenance C: function

D: repair / replace E: re-inspection required

Assessment:

Satisfactory = × Unsatisfactory = — Not required = 0

Inspection category 12: Superstructure - operator's cab						
Component inspected	A	B	C	D	E	Comments
Doors						
Windows / Windshield						
Windshield wipers						
Seat						
Air conditioning						
Ventilation						
Function control button						
Tilting control						
Emergency hammer						

Inspection category 13: Superstructure - hand-hold and protection devices						
Component inspected	A	B	C	D	E	Comments
Grab handles and ladders/treads						
Hood						
Doors						
Baffle						

Inspection category 14: Superstructure - drive system						
Component inspected	A	B	C	D	E	Comments
Engine						
Exhaust system						
Fuel tank						
Filters						
Soundproofing						
Engine mounting						
Fuel lines						

Inspection criteria:

A: preset / complete B: condition / maintenance C: function

D: repair / replace E: re-inspection required

Assessment:

Satisfactory = × Unsatisfactory = — Not required = 0

Inspection category 15: Superstructure - hydraulic system						
Component inspected	A	B	C	D	E	Comments
Oil reservoirs						
Oil filters						
Pumps						
Motors						
Valves						
Piping						
Hoses						
Oil cylinders						
Pressure relief valves						
Hoisting mechanism						
Slewing mechanism						
Inspection category 16: Superstructure - electrical system						
Component inspected	A	B	C	D	E	Comments
Motors						
Generators/alternators						
Batteries						
Switches						
Wiring						
Fuses						
Resistors						
Lighting						

Inspection criteria:

A: preset / complete B: condition / maintenance C: function

D: repair / replace E: re-inspection required

Assessment:

Satisfactory = × Unsatisfactory = — Not required = 0

Inspection category 17: Superstructure - control system						
Component inspected	A	B	C	D	E	Comments
Engine control						
Control devices						
Engine braking performance						
Monitoring indicators						

Inspection category 18: Driving system for wire rope						
Component inspected	A	B	C	D	E	Comments
Main winch						
Auxiliary winch						
Wire rope pulley						
Wire rope end connection						
Wire rope for main winch						
Wire rope for auxiliary winch						

Inspection category 19: Superstructure-hook						
Component inspected	A	B	C	D	E	Comments
Pulleys						
Wire rope guide rod on pulley						
Hook safety device						

Inspection criteria:

A: preset / complete B: condition / maintenance C: function

D: repair / replace E: re-inspection required

Assessment:

Satisfactory = × Unsatisfactory = — Not required = 0

Inspection category 20: Superstructure - safety and control devices						
Component inspected	A	B	C	D	E	Comments
Hoisting limit switch						
Lowering limit switch						
Load moment limiter						
Angle indicator						
Pressure sensor						
Wind gauge						
Outrigger monitoring						
Length detector						
Emergency stop						
Engine stop						

Inspection category 21: Boom						
Component inspected	A	B	C	D	E	Comments
Welding joints						
Rope pulleys						
Derricking cylinders						
Telescoping cylinders						
Boom bracket						

Inspection criteria:

A: preset / complete B: condition / maintenance C: function

D: repair / replace E: re-inspection required

Assessment:

Satisfactory = × Unsatisfactory = — Not required = 0

Note:

Inspection of the crane carrier vehicle roadworthiness is also fulfilled if it has already been certified by the road traffic department certification authority. For mobile cranes that are not certified for use on public roads, a competent or authorized inspector must conduct the tests to validate the vehicle’s roadworthiness.

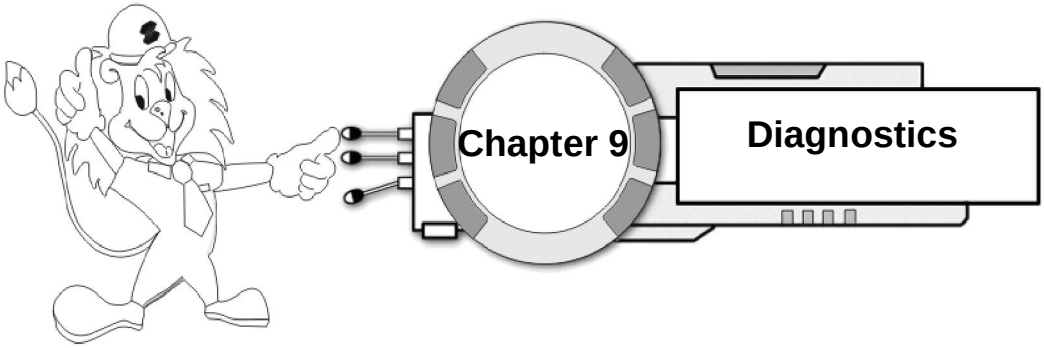

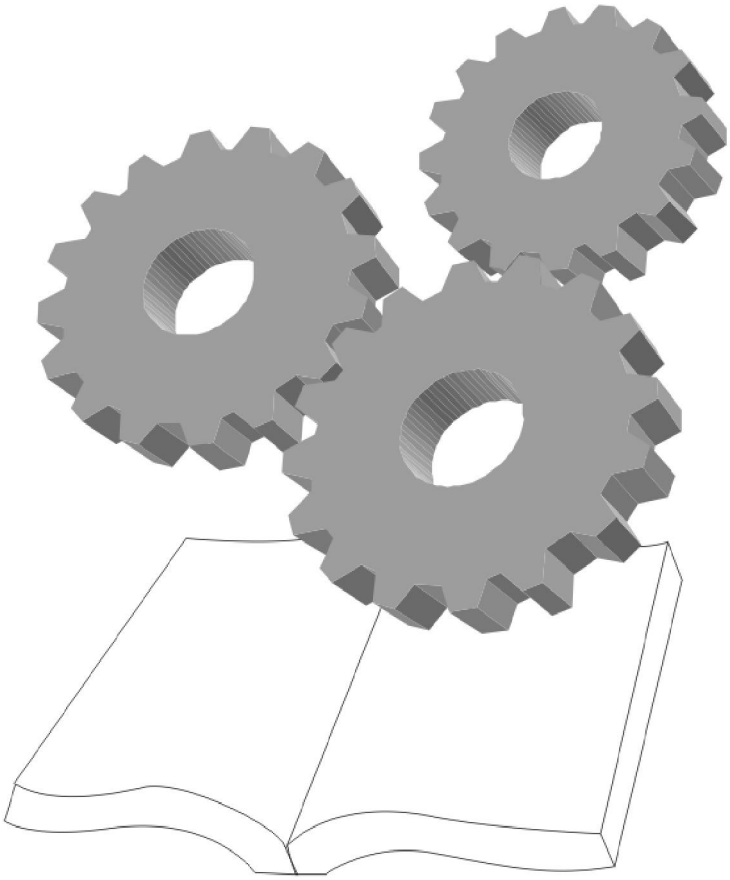

ZOOMLION

9.1 Diagnosis - crane superstructure

9.1.1 Instruments

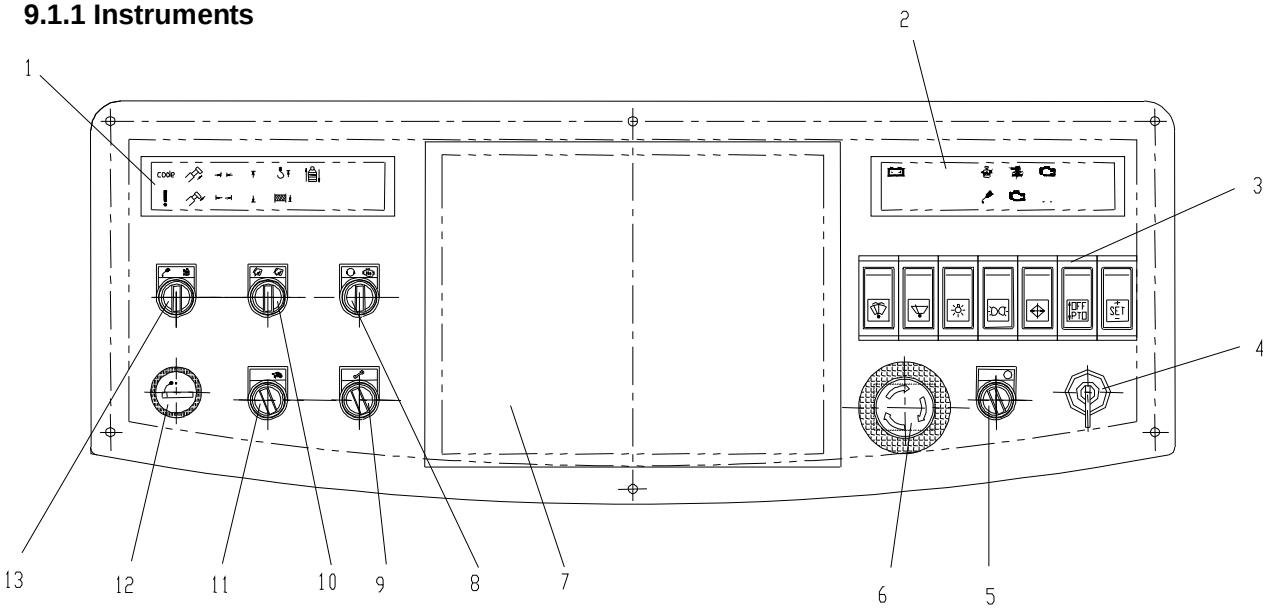

1	Display unit 1	
2	Display unit 2	
3	Keyboard	
4	Ignition starter switch	
5	Battery master switch	
6	Switch	Emergency off
7	Load moment limiter	
8	Switch	Supplying hydraulic oil / Engine fault diagnosis
9	Bypass key switch	
10	Switch	Tilting operator’s cab
11	Switch	Slow gear
12	Cigarette lighter	
13	Switch	Central lubricating system / Extending or retracting counterweight cylinders

9.1.1.1 Display unit

Display unit 1

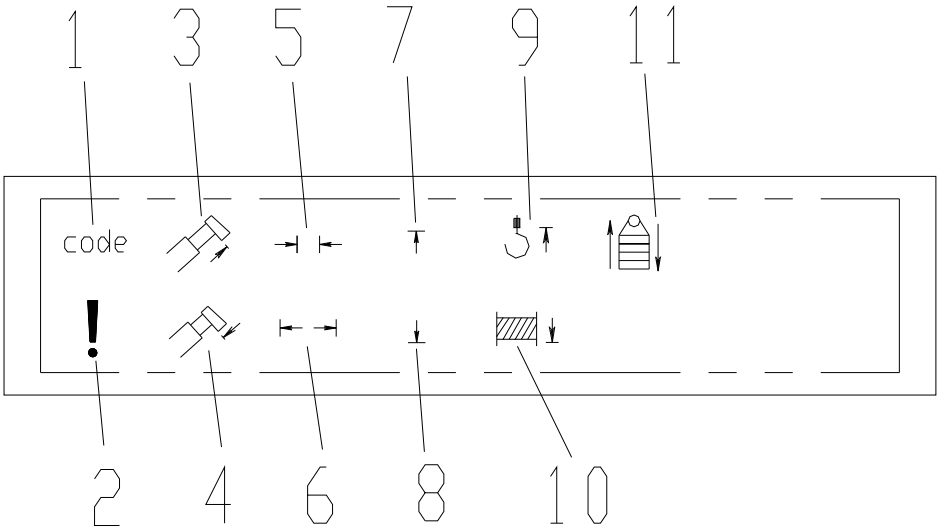

1 Control light — Boom pin operational

Illuminates:

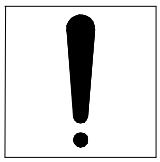

It is permitted to close the boom pin.

Do not close the boom pin until the control light lights up.

2 Control light — Boom code

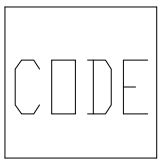

The times that the control light flashes every interval indicate the corresponding telescopic section the telescopic cylinder in.

3 Control light — Cylinder pin beyond its target hole

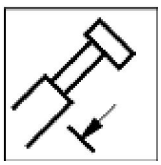

Illuminates:
The cylinder pin is beyond its target hole.

Retract the cylinder a little to align the cylinder pin with its target hole.

4 Control light — Cylinder pin not reaching its target hole

Illuminates:

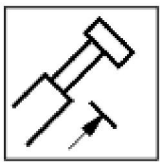

The cylinder pin does not reach its target hole.

Extend the cylinder a little to align the cylinder pin with its target hole.

Note:

If the cylinder pin is aligned with its target hole, the control lights 3 and 4 will light up simultaneously.

Do not operate the cylinder pin until both control lights 3 and 4 light up.

5 Control light Telescopic cylinder locked

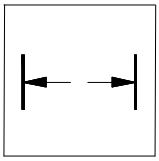

Illuminates:
The telescopic cylinder is locked with the telescopic boom.

6 Control light Telescopic cylinder unlocked

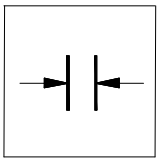

Illuminates:
The telescopic cylinder is unlocked with the telescopic boom.

7 Control light Boom pinned

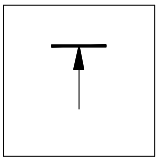

Illuminates:
The telescopic section is pinned.

8 Control light Boom unpinned

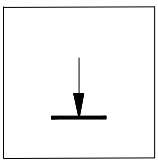

Illuminates:
The telescopic section is unpinned.

9 Warning light Main / auxiliary winch approaching upper limit

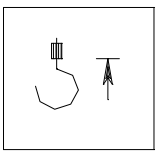

Illuminates:
Main / auxiliary winch approaches upper limit.

10 Warning light Main / auxiliary winch approaching lower limit

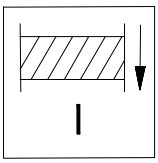

Illuminates:
Main / auxiliary winch approaches lower limit.

11 Control light Power of counterweight remote control box

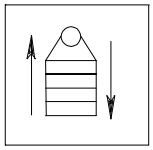

Illuminates:
The remote control box is activated.

Display unit 2

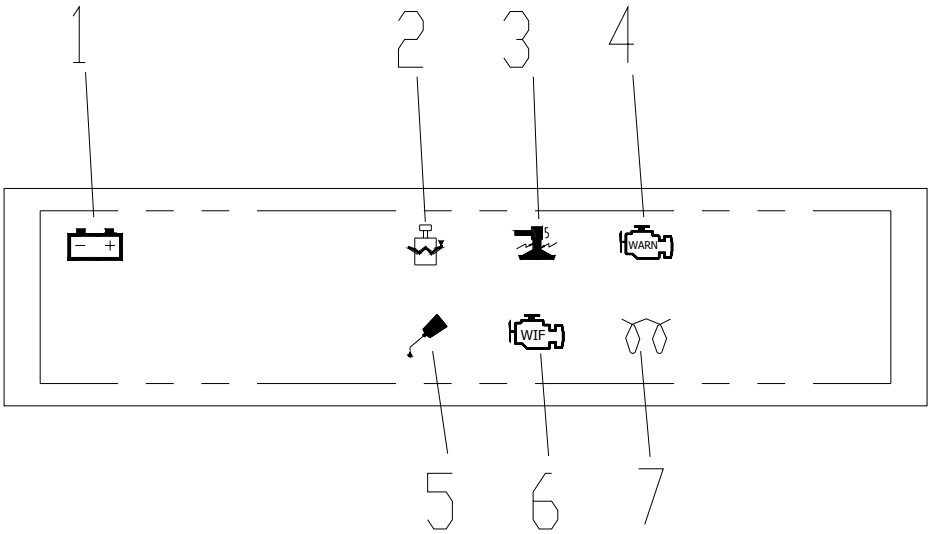

1 Warning light — Charge monitoring

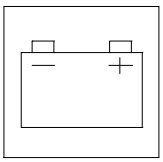

Illuminates:
Ignition starter switch is turned to the 1st position.

Extinguishes after enging starting:
The battery is charged.

Illuminates after enging starting:
Charge defects. Rectify at once.

2 Warning light — Engine cooling water level too low

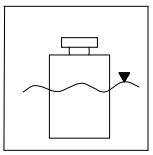

Illuminates:
Engine cooling water level is too low.

3 Warning light — The 5th outrigger pressure too high

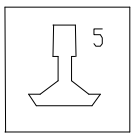

Illuminates:

The 5th outrigger pressure is more than 17.5MPa.

Stop the operation at once, and do not resume the operation until the current error is eliminated.

4 Warning light — Engine error code displayed

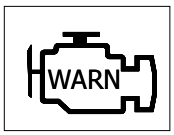

The warning light flashes to display the error code.

Caution:

When the warning lights “Engine error code displayed” or “Engine stop owing to serious engine defects” illuminates, you can use the engine fault diagnostic instrument to carry out diagnosis. This operation should be done by authorized specialists and the data set at the factory cannot be modified freely.

5 Warning light Lubricant level too low

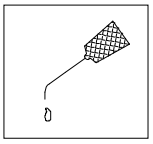

Illuminates:
The lithium base grease level in central lubricating system is too low.

Check it at once and fill lubricating grease if necessary.

6 Warning light Too much water in fuel

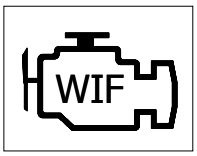

Illuminates:

Water in fuel exceeds the permissible maximum value.

7 Control light Diesel engine preheating system

In winter (the engine coolant temperature below -4°C), preheat the engine before starting.

Turn the key to ON position.

Illuminates:

Preheat the engine.

Flashes for 3 times:

Start the engine.

After the engine is started, preheat the engine continuously (this control light does not illuminate).

Note:

If the engine is started when the control light is lighting or flashing, the preheating operation will be cut off immediately.

9.1.1.2 Battery master switch

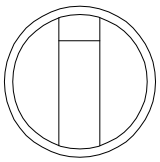

Right position:

– The battery master switch near the battery on slewing table is switched on;

– The switch background is lighting on.

– The superstructure is energized.

If the control light does not light up, check the connection of superstructure master power.

9.1.1.3 Superstructure, troubleshooting

If failures occur during crane operation, carry out a thorough check and analysis to find out the causes, and remedy them. Troubleshooting for common failures is listed in the following tables for reference.

System	Problem	Cause	Remedy
Electrical system	The working light does not illuminate.	1. Bulb damaged. 2. Fuse burnt out. 3. Poor grounding. 4. Conducting wire broken or switch invalid.	Replace Replace Rectify Rectify or replace
	Vehicle length control light does not illuminate.	1. Bulb damaged. 2. Switch invalid. 3. Conducting wire broken.	Replace Rectify or replace Replace
	Interior illumination does not light up.	1. Bulb damaged. 2. Switch invalid. 3. Conducting wire broken.	Replace Replace Rectify
	Instrument console background lighting is not on.	1. Bulb damaged. 2. Switch invalid. 3. Conducting wire broken.	Replace Replace Repair
	Control lights on instrument console do not light up.	1. Switch invalid. 2. Conducting wire broken.	Replace Rectify
	Wiper does not work.	1. Fuse burnt out. 2. Switch invalid. 3. Motor damaged.	Replace Replace Replace
	Horn does not work.	1. Fuse burnt out. 2. Switch invalid. 3. Relay defects. 4. Conducting wire broken. 5. Horn defects.	Replace Replace Replace Rectify Rectify or replace
	Buzzer does not work.	1. Fuse burnt out. 2. Switch invalid. 3. Relay defects. 4. Conducting wire broken. 5. Buzzer defects.	Replace Replace Replace Rectify Rectify or replace
	The superstructure engine cannot be started.	1. Main fuse burnt out or loose. 2. Conducting wire broken or switch invalid. 3. Electrical brush and slip-ring poorly connected.	Rectify or replace Rectify or replace Rectify or replace
	Hoisting limit switch does not work	1. Fuse burnt out. 2. Cable reel defects. 3. Conducting wire broken. 4. Limit switch invalid; 5. Limit weight rope	Replace Rectify or replace Rectify Replace

System	Problem	Cause	Remedy
		broken; 6. Solenoid valve invalid; 7. Solenoid valve poorly grounded.	Replace Rectify or replace Rectify
Electrical system	No crane movement can be initiated.	1. Fuse burnt out; 2. PLC burnt out.	Rectify PLC power wire Replace PLC controller
	Load moment limiter defects.	1. Fuse burnt out; 2. The power switch of LML defects; 3. Relay invalid; 4. Solenoid valve invalid; 5. Solenoid valve poorly grounded; 6. Others	Replace Rectify or replace Replace Rectify or replace Rectify Notify our service department
	Control light for upper limit / lower limit illuminates, accompanying with acoustic alarm	Hoisting limit switch / lowering limit switch defects.	Rectify
Hydraulic pump	Abnormal noise.	1. The oil in hydraulic pump is not sufficient; 2. Air enters into the oil suction pipe; 3. Mounting bolts loose; 4. Hydraulic oil polluted; 5. Hydraulic pump defects.	Fill oil Rectify Tighten Change oil and filter Rectified by trained specialists
	The connecting point between the pumps leaks oil.	1. Seal ring in connecting point damaged; 2. Bolts at connecting point loose.	Contact pump manufacturer for maintenance Tighten the bolts
Slewing mechanism	Brake invalid.	1. Brake lining is worn and has reached the wear limit; 2. Brake cylinder damaged.	Replace Replace
	The slewing movement is not working.	1. Solenoid valve for slewing brake is not electrified or is stuck. Brake is off; 2. Plug of solenoid valve for slewing pump is not electrified or loose; 3. Hydraulic motor damaged; 4. Slewing reducer defects.	Rectify solenoid valve Rectify Replace Maintained by trained specialists
	The slewing movement is abnormally slow.	1. Inner leakage of hydraulic motor is increased and	Replace motor

System	Problem	Cause	Remedy
		efficiency is decreased; 2. Pilot oil pressure is too low and brake is not open completely; 3. Slewing pump defects.	 Rectify Maintained by trained specialists
Derricking mechanism	Oil cylinder cannot be extended.	1. Setting pressure of main relief valve is too low; 2. Main valve has inner oil leakage; 3. Oil cylinder has inner oil leakage.	Regulate Rectify Rectify
	Oil cylinder cannot be retracted.	1. Derricking-control balance valve defects; 2. Electrical system defects; 3. Pilot oil has no pressure. Balance valve is not open.	Rectify or replace Rectify Rectify
	Oil cylinder retracts automatically during operation.	1. Oil cylinder has inner oil leakage; 2. Balance valve defects.	Rectify Rectify
Hoisting mechanism	Hook cannot be lifted.	1. Solenoid valve for hoist brake is not electrified or is blocked. Brake is off; 2. Hydraulic motor damaged; 3. Winch reducer defects; 4. Main valve defects.	Rectify Replace Maintained by trained specialists Maintained by trained specialists
	Hook cannot be lowered.	1. Solenoid valve for hoist brake is not electrified or is blocked. Brake is off; 2. Pilot oil pressure is too low; 3. Balance valve is blocked and is not open; 4. Main valve defects.	Rectify Rectify Rectify Maintained by trained specialists
	Brake invalid.	1. Brake lining is worn and	Replace

System	Problem	Cause	Remedy
		has reached the wear limit; 2. Brake cylinder is damaged.	 Replace
	Hoist up speed is abnormally slow.	1. Hydraulic motor defects; 2. Main valve defects.	Maintained by trained specialists Maintained by trained specialists
Telescoping mechanism	Boom cannot be telescoped out.	1. Electrical-controlled shutoff gate valve is not electrified or is blocked; 2. Electrical system defects; 3. Main valve defects; 4. Oil cylinder has inner oil leakage;	Rectify Rectify Maintained by trained specialists Rectify
	Boom cannot be telescoped in.	1. Electrical-controlled shutoff gate valve is not electrified or is blocked; 2. Two balance valves are not open; 3. Boom pin is pinned; 4. Main valve defects.	Rectify Rectify Rectify Maintained by trained specialists
	Boom telescoping speed is abnormally slow.	1. One of the balance valves is not open; 2. Main valve defects.	Rectify Maintained by trained specialists

9.2 Diagnosis - crane chassis

9.2.1 Instruments

The diagnosis screens of chassis instruments and engine components are as follows:

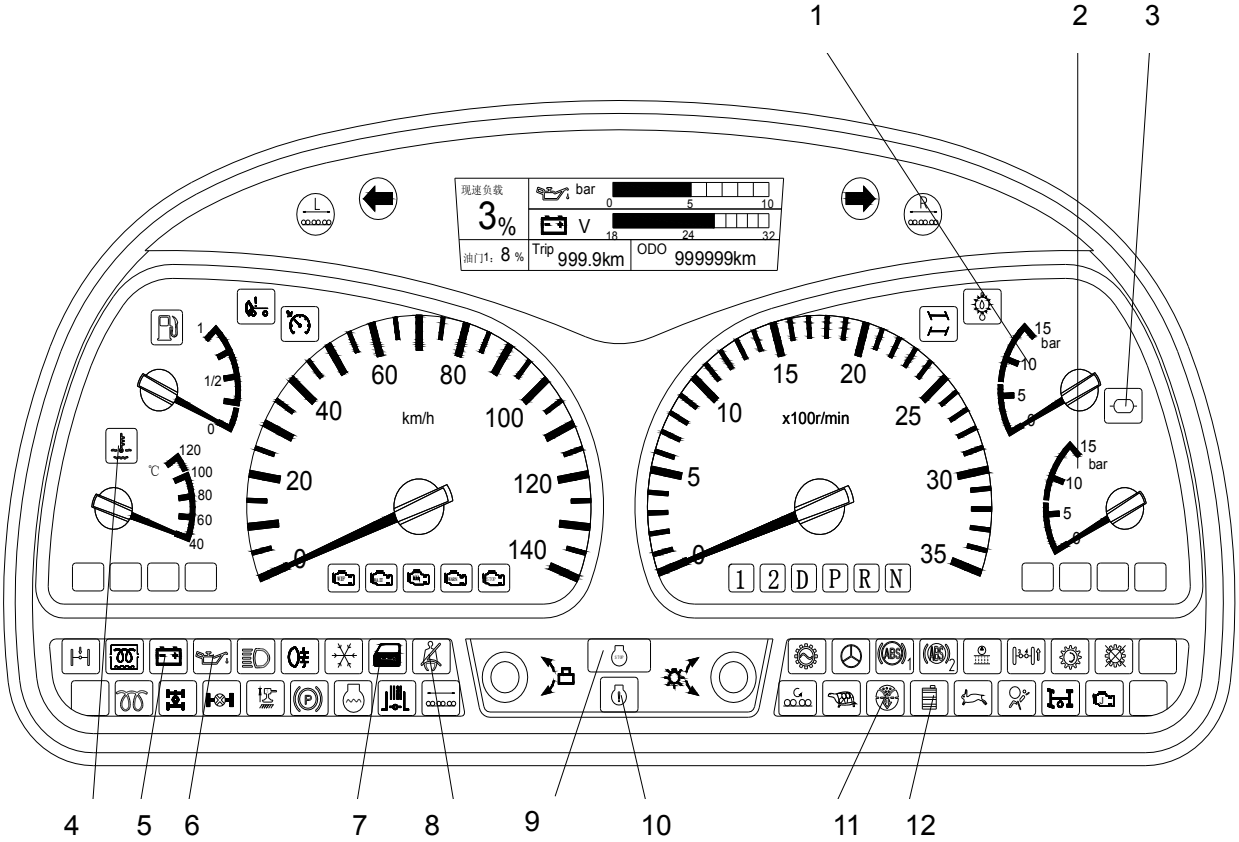

1. Barometer I
2. Barometer II
3. Warning light — Brake pressure too low
4. Warning light — Engine coolant temperature too high
5. Warning light — Charge monitoring
6. Warning light — Oil pressure too low
7. Warning light — Door not closed well
8. Warning light — Seat belt unfastened
9. Warning light — Engine stop owing to serious engine defects
10. Warning light — Engine defects
11. Warning light — Air filter soiled
12. Warning light — Engine cooling water level too low

1. Barometer I

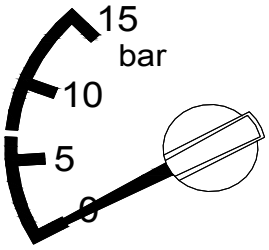

The two barometers display the air pressure of main air reservoirs for front and intermediate / rear axle respectively. If the air pressure is less than 0.55MPa, the warning light will illuminate and the buzzer will sound. Never start off if buzzer sounds!

2. Barometer II

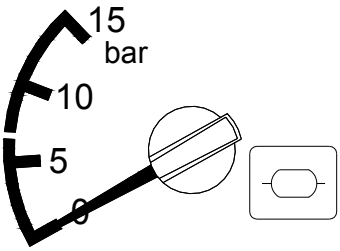

3. Warning light Brake pressure too low

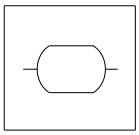

Illuminates:

Brake pressure too low. Do not drive the vehicle. Rectify the brake system at once.

Extinguishes:

Brake pressure increased to specified value.

Never drive the vehicle if the warning light lights up.

4. Warning light Engine coolant temperature too high

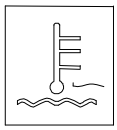

Illuminates:

Engine coolant temperature is too high.

Extinguishes:
Check water thermometer and stop the vehicle to check engine cooling system.

Troubleshooting:

Run the engine at idle speed for a few minutes before shutting down the engine to avoid its cylinder being blocked caused by sudden decreased temperature.

5. Warning light Charge monitoring

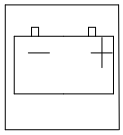

Illuminates:

The ignition key is in position ON.

Extinguishes:

– The engine is started;

– The engine begins to charge the battery.

Caution:

If the warning light does not extinguish during battery charging, it is generator or charging system fault. Stop to check at once!

6. Warning light Oil pressure too low

Illuminates:
Oil pressure is too low or oil filter is soiled.

Stop the vehicle at once to rectify, otherwise, the engine will be seriously damaged. At this time, driving the vehicle will cause engine damage.

7. Warning light Door not closed well

Illuminates:
The door is not closed well.

Do not drive the vehicle when the warning light lights up.

It will cause fatal injury!

8. Warning light Seat belt unfastened

Illuminates:
The seat belt is not fastened or not fastened well.

Make sure that all occupants put on the seat belts.

9. Warning light Engine stop owing to serious engine defects

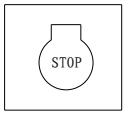

Illuminates:
Crane superstructure engine detects serious engine defects.

Stop the engine and rectify at once.

10. Warning light Engine defects

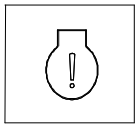

Illuminates:
Crane superstructure engine detects engine defects.
Stop the engine and rectify at once.

11. Warning light Air filter soiled

Illuminates:
The air filter of the chassis engine is soiled.

Rectify it at once.

12. Warning light Engine cooling water level too low

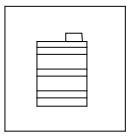

Illuminates:
Engine cooling water level is too low.

Stop the vehicle at once to check cooling system for leakage.

Fill coolant till the coolant is lowered to ambient temperature.

Do not fill coolant at once to avoid engine being blocked.

Caution:

When the warning lights “Engine defects” or “Engine stop owing to serious engine defects” illuminates, you can use the engine fault diagnostic instrument to carry out diagnosis. This operation should be done by authorized specialists and the data set at the factory cannot be modified freely.

9.2.2 Transmission, troubleshooting

The following table shows the possible problems of transmission, fault causes and troubleshooting.

Problem	Causes	Remedy
It is difficult to operate the range selector.	The clutch is not released completely.	Check if the clutch is released correctly. Check if the gear shift mechanism is worn. Check if clutch (the stroke of release bearing) is adjusted correctly.
	There is a fault in the control mechanism of gear shift mechanism (remote control mechanism)	Check range selector or flexible shaft for proper adjustment, colligation and lubrication, or check them for wear.
	There is a fault in the upper housing.	Check upper housing for adhesion, wear or damage.
	There is a fault in transmission main shaft	Check if main shaft is distorted. Check if sliding gear sleeve is damaged or worn excessively. Check if synchronizer is adhesive and damaged, or the friction material is worn excessively.
	There is a fault in input shaft.	Check if the input spline is worn. Check if guide bearing or bush is damaged.
	The skill of driver.	The driver is not familiar with the operation of clutch.
The indication of odometer is unstable or the odometer is not working.	There is a fault in the gear of odometer.	Check the gear of odometer for damage. Check the drive gear of odometer for damage.
	There is a fault in the cable.	Check the cable for knob or damage.
	There is a problem of odometer.	Carry out fault diagnosis according to odometer operating manual provided by manufacturer.

Warning:

1. The driver must shift the transmission into neutral "N", apply the parking brake and release the cultch before starting the vehicle.
2. The driver must shift the transmission into neutral "N", apply the parking brake and put suitable materials and bases beneath the wheels before maintaining the vehicle.
3. The driver must shift the transmission into neutral "N", lift the rear wheel off the ground, demount the propeller shaft or disengage the drive pair before carrying out towing operation, so as to avoid transmission damage.

9.2.3 Chassis, troubleshooting

(If the engine defects cannot be eliminated according to O*perating manual for engine* and the following tables, send the vehicle to factory for repairing.)

9.2.3.1 Propeller shaft

Problem	Causes	Remedy
Abnormal noise during vehicle start, accelerating and decelerating.	Universal joint cross shaft, needle roller wear and loose or needle roller broken.	Replace damaged one
	Propeller shaft spline and expansion joint splineway have reached wear limit.	Replace damaged one
	Spline in the 2nd shaft of transmission and flange splineway have reached wear limit.	Replace damaged one
Periodical noise during driving. The higher the speed is, the louder the noise is. In a serious condition, the whole vehicle flutters and steering wheel is not flexible.	Propeller shaft bent or propeller shaft flange is not welded properly to axle tube.	Replace propeller shaft
	Bolts of intermediate support hanger loose or are not properly seated.	Tighten or replace
	Bolts connecting adjacent propeller shafts loose.	Tighten
	Propeller shaft balance block falls off.	Replace or repair
Abnormal noise during driving. The higher the speed is, the louder the noise is.	Intermediate support is not properly seated or has reached wear limit.	Regulate or replace
	Bearing balls in the intermediate support fall off.	Replace bearing.
	Intermediate support lacks of grease.	Fill 2# lithium base grease

9.2.3.2 Intermediate and rear axles

Problem	Causes	Remedy
Abnormal noise	Noise sounds like "si" during accelerating or decelerating: meshing clearance of gears too small or poorly meshed.	Adjust
	New gear poorly meshed	Observe after breaking-in.
	Noise sounds like "clash" on descending gradients or during changing vehicle speed jerkily. Noise fades away or decreases during normal driving: meshing clearance of gears too large.	Adjust or replace gear.
	Continuous noise during driving. The higher the speed is, the louder the noise is. But noise fades away or decreases during sliding: the bearings (on hub, main reducer or differential) wear and loose.	Adjust or replace bearing.
	Gear oil level too low or oil viscosity do not meet requirements.	Fill oil to required level. Replace with required oil.
	No noise during straight driving but noise sounds during turning: clearance of bearings on both sides of reducer too large. Differential gear or thrust bearing shim wears.	Adjust and replace
Heat generation	Bearing installed too tightly. Meshing clearance too small.	Adjust
	Oil level too low.	Fill oil to required level.
	Lubricant viscosity too low.	Replace with required lubricant.
Oil leakage	Oil seal invalid.	Replace it
	Axle journal wear.	Replace damaged one.
	Oil level too high	Drain oil to required level.
	Sealing gasket damaged.	Replace it
	Bolt loose.	Tighten
	Vent cap soiled.	Clean

9.2.3.3 Steering system

Problem	Causes	Remedy
Hard steering	Oil level and oil viscosity are too low, resulting in insufficient steering power. Air enters into the system.	Check the oil level and fill required oil. Deaerate. Check oil level and pipe fittings for tightness.
	Oil pump serious inner wear results in hard steering	Replace and check
	Seal elements of oil pump damaged, resulting in oil leakage	Replace seal elements
	Drive elements of oil pump damaged	Check and replace
	Spring of safety valve in oil pump is fatigue or breaks, resulting in oil over-returned.	Repair safety valve and replace spring.
	Oil leakage occurs in oil pipe fittings and pipes are blocked or bent.	Check, clean and replace the pipes and fittings.
	Filter soiled, poor cleanliness	Clean filter and cartridge. Oil change.
	Serious inner leakage occurs in steering gear.	Rectify or replace sealing ring
	Front wheels blocked (brake cannot be pulled back)	Rectify the blocked parts
	Steering knuckle main pin, thrust bearing and adjusting shim damaged, resulting in clearance too large or small.	Replace bearing and adjusting shim. Adjust clearance.
Quick steering is hard	Oil pump supply insufficient oil.	Oil level in oil reservoir is too low. Fill oil and rectify oil pump.
	Oil suction pipe of oil pump blocked.	Replace pipes
	Serious oil leakage occurs in both sides of piston in steering gear. The sealing ring is damaged or has reached wear limit.	Replace oil seal
	Air enters in.	Deaerate and check connecting parts for tightness.
Steering is sometimes hard or sometimes uncontrolled	Floating brass bush of steering pump is blocked and does not contact with wheel end-face tightly all the time.	Rectify oil pump.
	Sealing ring of piston in steering gear is polluted.	Check. Lift up front axles. Operate steering wheel. If the steering gear is active without starting the diesel engine, the oil pump is defective.
	Thrust bearing in screw rod of steering gear damaged.	Replace bearing.
	Hydraulic oil is polluted or air enters into the system.	Oil change or deaerate.
	Bearing of knuckle spindle damaged.	Replace bearing.
Left steering is uncontrolled while right steering is hard, and vice versa	Oil leakage occurred in the two sides of piston in steering gear are not the same.	Replace seal ring.
	Air enters into one of the chambers.	Deaerate
	Mounting screws in steering gear and power cylinder bracket loose.	Check and tighten the screws.
	Clearance between ball head pins of drive rod is too large.	Check or replace

Problem	Causes	Remedy
The vehicle cannot drive in a straight line	Tire pressure of left / right steering wheel does not meet the specified one.	Check and inflate to specified pressure.
	One of the steering wheels is in brake state for a long time.	Adjust or rectify brakes.
	The clearance of left / right steering wheel are not same (one is too loose while the other is too tight or blocked).	Adjust bearing clearance or replace bearing.
	Steering axles are blocked.	Check the blocked parts. Check whether input shaft is blocked by radial resistant force.
	Air enters into oil and direction is not stable.	Check and eliminate.
	Steering wheels uneven wear	Tire rotation.
	Vehicle axles are not properly seated, such as steering axles do not aligned with the intermediate / rear axles or improperly seated.	Check and adjust.
Free clearance of steering wheel too large	Steering drive rod is improper adjusted or has reached wear limit.	Adjust clearance or replace rods.
	Drive pair in steering gear wear makes large clearance.	Loosen the locking nuts in the side cover of steering gear. Tighten it to proper clearance. Tighten torque is 130 to 180N.m.
	Mounting screws in steering gear or tightening screws in suspension bracket loose.	Check and tighten the screws.
	Clearance between ball head pins of drive rod is too large.	Check and replace.
	Clearance of angle drive gear is too large.	Check and adjust.
Front wheel swings	Oil level is too low or air enters into the system.	Fill oil equalizing reservoir up to overflow on filler neck or deaerate.
	Oil line is poorly sealed and air enters into it.	Check the oil line and tighten it.
	Left / right steering wheel are not inflated equally.	Check air pressure. Inflate the left / right wheel into the same pressure.
	U-bolt of front leaf spring loose.	Check and tighten.
	Wheels loose.	Check and tighten.
	Connecting components of drive rod loose.	Check and tighten.
	Connecting components of drive rod lacks of lubricant.	Check and fill lubricant.
	Steering gear is inner blocked.	Check and rectify.
Steering wheel cannot rebound	Distribution valve is polluted, resulting in slide valve being blocked.	Clean and rectify.
	Centering spring damaged.	Replace spring.

Problem	Causes	Remedy
smoothly		
Oil leakage occurs in steering gear	Oil leakage occurs in oil seal.	Check and replace oil seal.
	Oil leakage occurs in O-ring.	Check and replace O-ring.
	Oil pipe leaks oil or is damaged.	Check and replace oil pipes.
	Oil leakage occurs in connecting parts of oil pipe fitting.	Check the leaking point.
	Oil viscosity too low.	Use specified oil.
	Joint face of hydraulic elements loose.	Check and tighten.
Abnormal noise during steering	Oil pipes in hydraulic pipe lines blocked.	Check oil line and replace damaged one.
	Displacement of oil pump is unstable.	Replace oil pump.
	Oil level in the oil tank too low.	Fill oil.
The vehicle does not have firm control of the ground when driving at high speed	Flow control valve blocked.	Clean flow control valve.
Bubbles appears in hydraulic oil tank	Pipes are not tightened and air enters in.	Check pipes for tightness.

9.2.3.4 Brake system

Problem	Causes	Remedy
Brake bias	Uneven brake force.	Check and adjust brake. The clearance between brake drum and brake shoe is about 0.3 to 0.5mm.
	The air pressures inflated to the tires are not same.	Check and inflate pressure.
	Brake shoe does not wear synchronously.	Check and replace brake shoe.
Brake locked	The clearance between brake shoe and brake wheel hub is too small.	Check and adjust brake. The clearance between brake drum and brake shoe is about 0.3 to 0.5mm.
	Brake chamber push rod returns un-smoothly.	Repair and replace
	Brake main valve and relay valve are inter-connected.	Repair and replace
	Parking brake is unreleased.	Check and release parking brake.
Brake is invalid and responses lag	Brake main valve, parking brake valve, relay valve and spool of quick-release valve blocked.	Repair and replace
	Inner leakage occurs in brake chamber.	Repair and replace
	Air leakage occurs in pipe line and valve.	Repair and replace
	Air drier invalid.	Repair and replace
	Four-circuit protection valve invalid.	Repair and replace
PTO is not working.	Spool of PTO solenoid valve blocked.	Repair and replace
	Coil of PTO solenoid valve damaged.	Repair and replace
	Air leakage occurs in end cover and pipe line of PTO.	Repair and replace
	PTO control cylinder invalid.	Repair and replace
Differential lock is not working.	Coil of transversal and longitudinal solenoid valve damaged.	Repair and replace
	Spool of transversal and longitudinal solenoid valve blocked.	Repair and replace
	Air leakage occurs in end cover and pipe line of transversal and longitudinal solenoid valve.	Repair and replace
	Actuating cylinder of differential lock invalid.	Repair and replace

9.2.3.5 PTO

Problem	Causes	Remedy
Oil leakage	Oil seal or paper gasket breakage.	Replace
	Paper gasket is not sealed or just one face is sealed with sealant.	Seal the two faces with sealant.
	The PTO side cover is not tightly contacted with end-face of the housing of transmission rear cover.	Remove the side cover of PTO and rectify.
PTO is not working	Air leakage occurs in end cover and pipe line of PTO solenoid valve.	Repair and replace
	Spool of PTO solenoid valve blocked.	Repair and replace
	Coil of PTO solenoid valve damaged.	Repair and replace
	PTO control cylinder invalid.	Repair and replace
	Intermediate shaft of transmission damaged.	Check and replace
Abnormal noise	Gear is pitting corrosion seriously or broken.	Replace
	Bearing is pitting corrosion seriously or needle roller or ball broken.	Replace bearing
	Bolts in hollow shaft end loose.	Tighten or replace

9.2.3.6 Tires

Problem	Causes	Remedy
The insides of steering wheels are seriously worn to the same extent	Toe-in too small or in negative value.	Adjust the tie rod of front axles for steering along the stretching direction and increase the toe-in value to specified one.
The outsides of steering wheels are seriously worn to the same extent	Toe-in too large.	Adjust the tie rod of front axles for steering along the retracting direction and decrease the toe-in value to specified one.
The insides of steering wheels on one side are seriously worn, while the outsides of steering wheels on another side are seriously worn	Steering axles and driven axles are not aligned or the axles are improperly seated.	Adjust the axles in proper position.
	When one steering wheel is in straight-line driving, another steering wheel is not in straight-line driving. **Caution:** If the crane is only equipped with one steering axle, this kind of fault will not occur.	Adjust the drag rod of front steering axles to make the two steering wheels drive in straight line.
Saw-tooth wear	Tires are standing wave: wheels deformed.	Reinstall wheels or replace.
	Tires are standing wave: wheels not rotating in equalization.	Check whether too much talcum powder in tires.
One side wheels seriously wear	Wheels are in brake or semi-brake mode for a long time.	Adjust the brake clearance to specified one.
	The specification and size of wheels on this side does not meet the requirements.	Replace
Tires of drive wheel seriously wear	Drive axles are not aligned	Adjust
	Transversal or longitudinal differential lock switch is not closed, resulting in the drive wheels in locking mode for a long time.	Close transversal or longitudinal differential lock during normal driving.
	Transversal or longitudinal differential lock is defective, resulting in the drive wheels in locking mode for a long time.	Check and repair, or replace the defective one.
Tire bursting	Overloading caused by putting weight on the crane during driving.	Remove the weight and replace wheels.
	Vehicle is driving at high speed for a long time.	Replace. Do not drive the vehicle at high speed for a long time.
	Tires damaged.	Replace
	Tires reach the wear limit.	Replace

9.2.3.7 Hydraulic system

Problem	Causes	Remedy
Oil pump noise	Oil level too low.	Fill oil.
	Air enters into the oil suction pipe.	Rectify
	Mounting bolts loose.	Tighten
	Hydraulic oil polluted.	Change oil or filter. Replace oil filter or cartridge.
	Propeller shaft vibration.	Rectify
	Universal joint wear.	Replace
	Hydraulic oil pump defects.	Contact trained specialists for maintenance.
Outriggers are not working	The pressure of relief valve of hydraulic changeover control valve block for steering / outrigger is improperly adjusted.	Adjust
	Solenoid valve plug loose. Solenoid valve is not electrified.	Rectify plug and power source.
	Spool of chassis solenoid valve blocked.	Clean it or contact trained specialists for maintenance.
Outrigger moves too slowly and vertical cylinder retracts automatically when lifting load	Inner leakage occurs in chassis solenoid valve.	Rectify or replace.
	The setting pressure of relief valve of changeover control valve block for steering / outrigger is too low.	Adjust
	Two-way hydraulic lock invalid.	Rectify or replace.
	Inner leakage occurs in oil cylinder.	Rectify
Outrigger vertical cylinder sinks down automatically during driving	Two-way hydraulic lock invalid.	Rectify
	Inner leakage occurs in oil cylinder.	Rectify
	Oil cylinder leaks.	Rectify